Installation Instructions

Bas

DE-0442-SAT

Reading lights Bas GU10 max. 8W Satin nickel



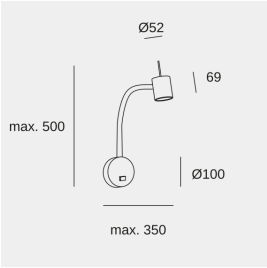

TECHNICAL FEATURES

IP20

Luminaire total power : 8W

Structure material : Steel

Structure finish : Satin nickel

Max. size of light bulb : 55/50 mm

Recommended light bulb : GU10

Voltage / frequency : 100-240V ~ 50/60Hz

Warranty : 5 Years

Easily recyclable luminaire

LUMINOTECHNIC FEATURES

Lampholder	Quantity	Light source power (W)	Correlated Colour Temperature (CCT)
GU10	1	Max. power 8W	-

LOGISTICS

Net weight (kg): 0.39

Packaged weight (kg): 0.56

Packaging: 150mm x 105mm x 165mm

20 Un

LIGHT APPLICATION



Image may not match reference. LEDS C4 reserves the right to amend any of the product's components. The data related to flux, power and colour temperature are subject to a tolerance of ±10%.

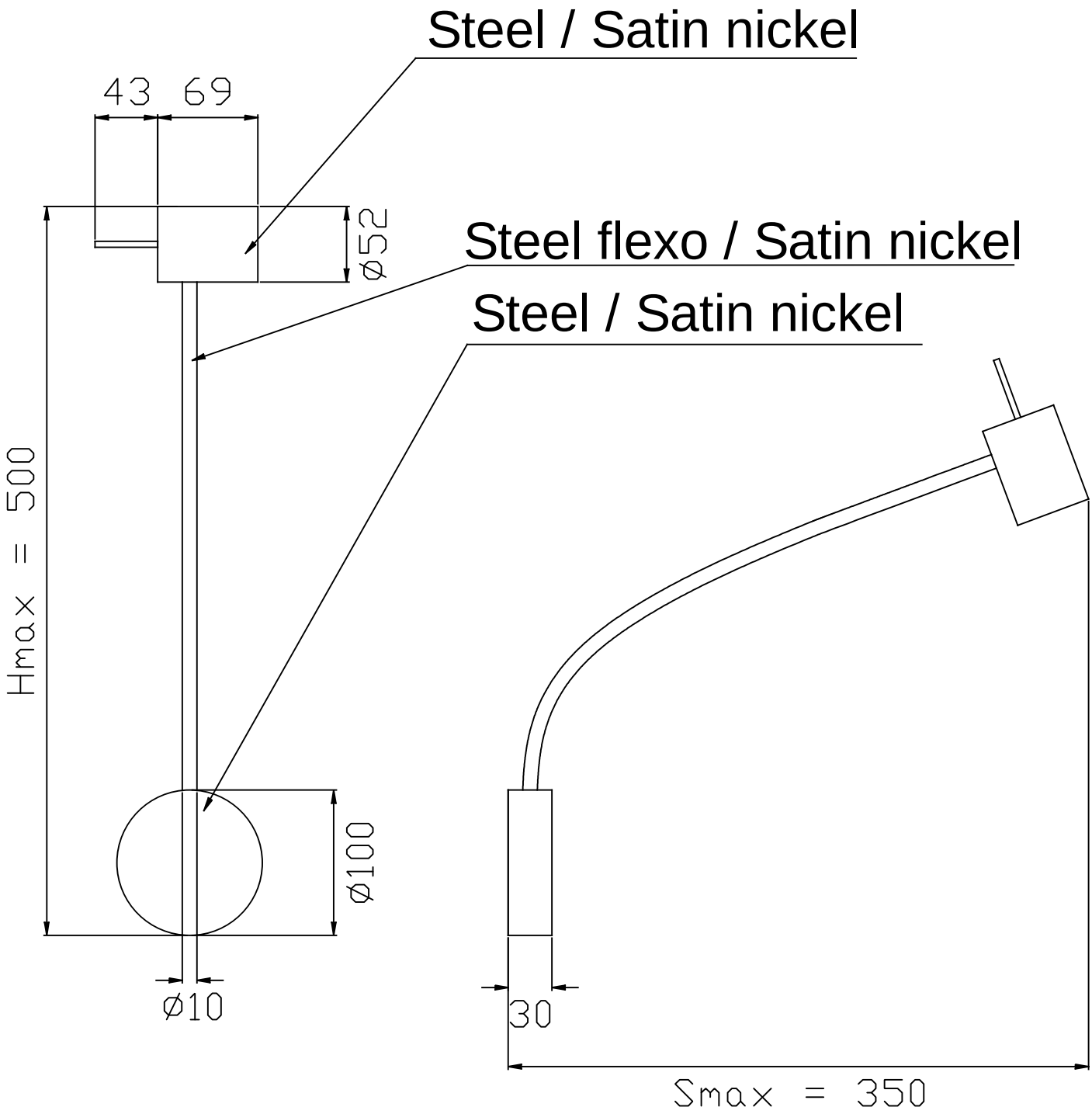

INSTALLATION TEMPLATE

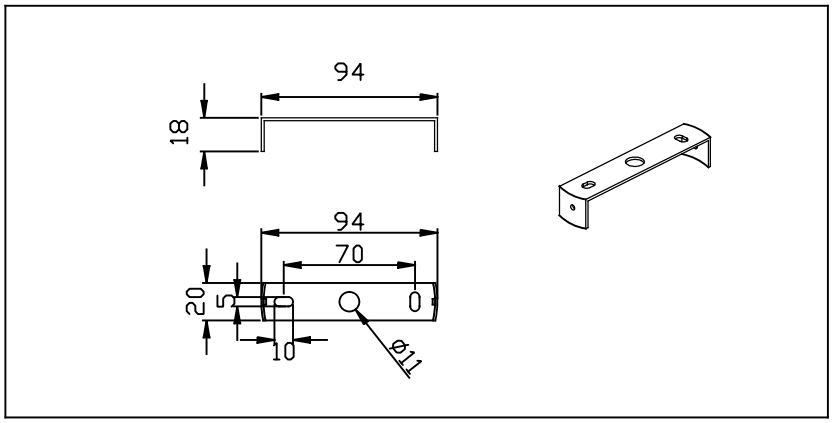

Bas

DE-0442

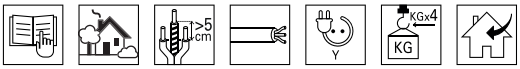



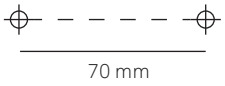

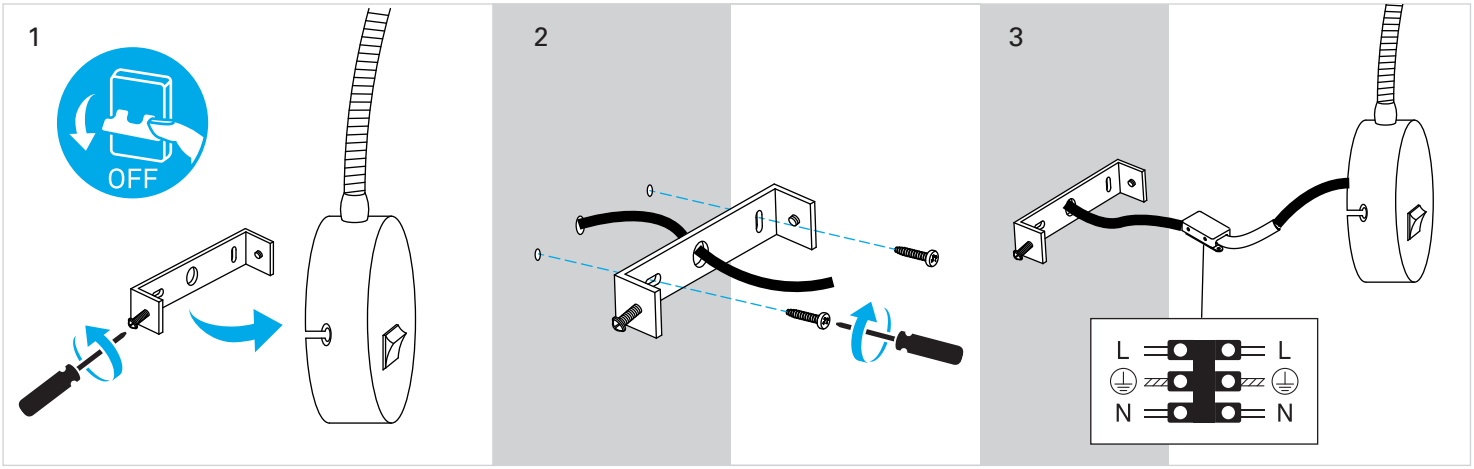

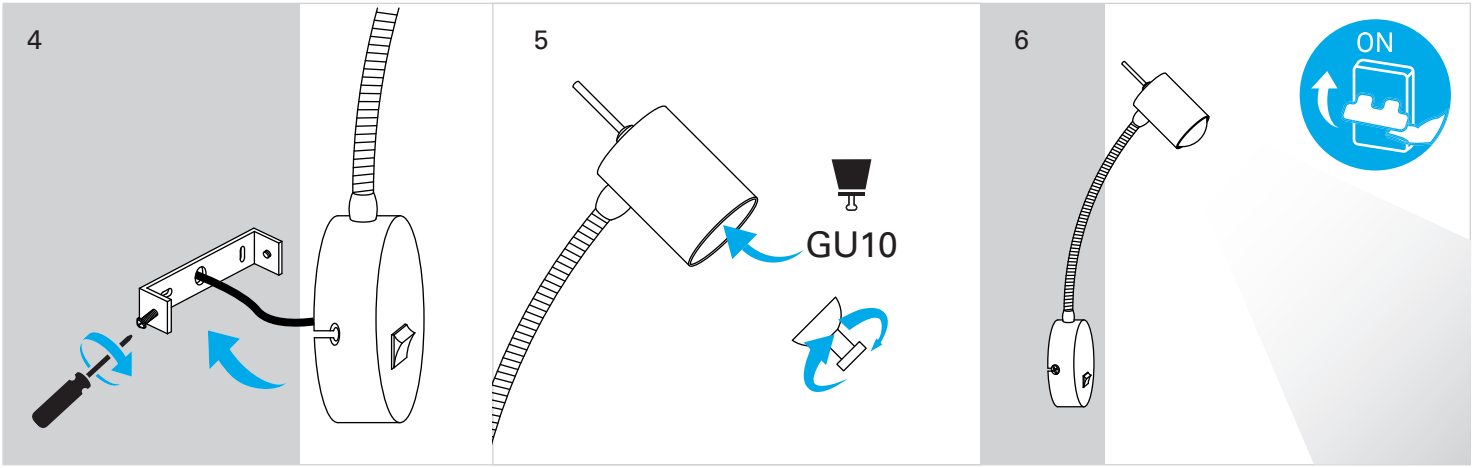

25-08-2021