Installation Instructions
Photometry

Easy Round Ø225mm

LedsC4 Team

TC-0151-BLA

Recessed ceiling lights Easy Round Ø225mm LED 18.2W 4000K ON-OFF White IN IP20 / OUT IP54 1510.00

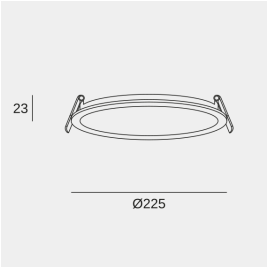

205

0-12

TECHNICAL FEATURES

IN IP20 / OUT IP54

Luminaire total power : 18.2W

Real lumens : 1508

Nominal lumens : 1510

Real lm/W : 83

Lens / reflector angle : HORIZONTAL 112º

Structure material : Aluminium

Structure finish : White

Diffuser material : Acrylic

Diffuser finish : Opal

Voltage / frequency : 100-240V ~ 50/60Hz

Dimming protocol : ON-OFF

Power Factor : 0.90

Useful life : 36.000h L70B30

Warranty : 5 Years

Easily recyclable luminaire

LUMINOTECHNIC FEATURES

CRI: 80

MacAdam steps: 3

Photobiological risk: RG1

Lampholder	Quantity	Light source power (W)	Correlated Colour Temperature (CCT)
LED	1	15.5W	4000K

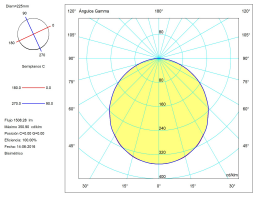

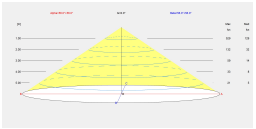

LOGISTICS

Net weight (kg): 0.4

Packaged weight (kg): 0.53

Packaging: 255mm x 45mm x 235mm

20 Un

LIGHT APPLICATION

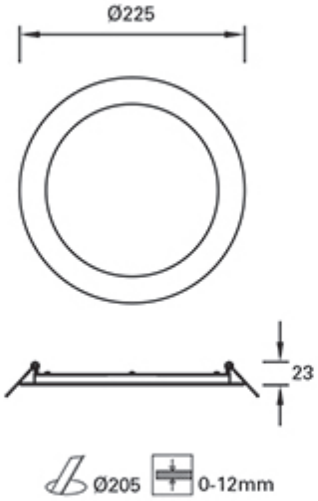

Image may not match reference. LEDS C4 reserves the right to amend any of the product's components. The data related to flux, power and colour temperature are subject to a tolerance of ±10%.

Luminaire
Code TC-0151-BLA
Name Downlight FORLIGHT 15.5W 4000K
Measurem.
Code TC-0150-BLA
Name Downlight FORLIGHT 15.5W 3000K

Luminaire Flux	1508.27 lm	Luminaire Power	17.00 W	Efficacy	88.72 lm/W	Efficiency	100.00%
Lamps Flux	1508.28 lm	Maximum value	350.90 cd/klm	Position	C=0.00 G=0.00	CG	Double Symmetrical

Round Luminaire	Diam. 225 mm	Height	3 mm
Round Luminous Area	Diam. 175 mm	Height	0 mm
Horizontal Luminous Area	0.024053 m2	Emitting area on Plane 180°	0.000000 m2
Emitting area on Plane 0°	0.000000 m2	Emitting area on Plane 270°	0.000000 m2
Emitting area on Plane 90°	0.000000 m2	Glare area at 76°	0.005819 m2
Coordinate system	CG	Symmetry Type	Double Symmetrical
Date	14-06-2016	Maximum Gamma Angle	90
Measurement Distance	0.00	Measurement Flux	1508.28 lm
Operator	Asselum T2	Source Voltage [V]	
Temperature	25.00 °C	Source current [A]	
Humidity	60.00 %	Photocell	
Notes			

Luminaire Lamps

Line	Code	Name	Flux [lm]	Pow. [W]	Q.ty
	TC-0150-BLA	TC-0150-BLA - 17.00 W	1508.28	17.00	1

C.I.E.	47 78 95 100 100	D DIN 5040	A30
F UTE	1.00 E	B NBN	BZ 5

Diam=225mm

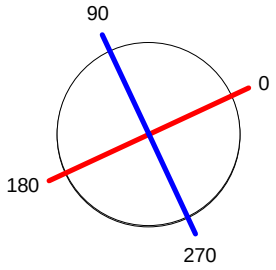

C Halfplanes

180.0 — 0.0
270.0 — 90.0

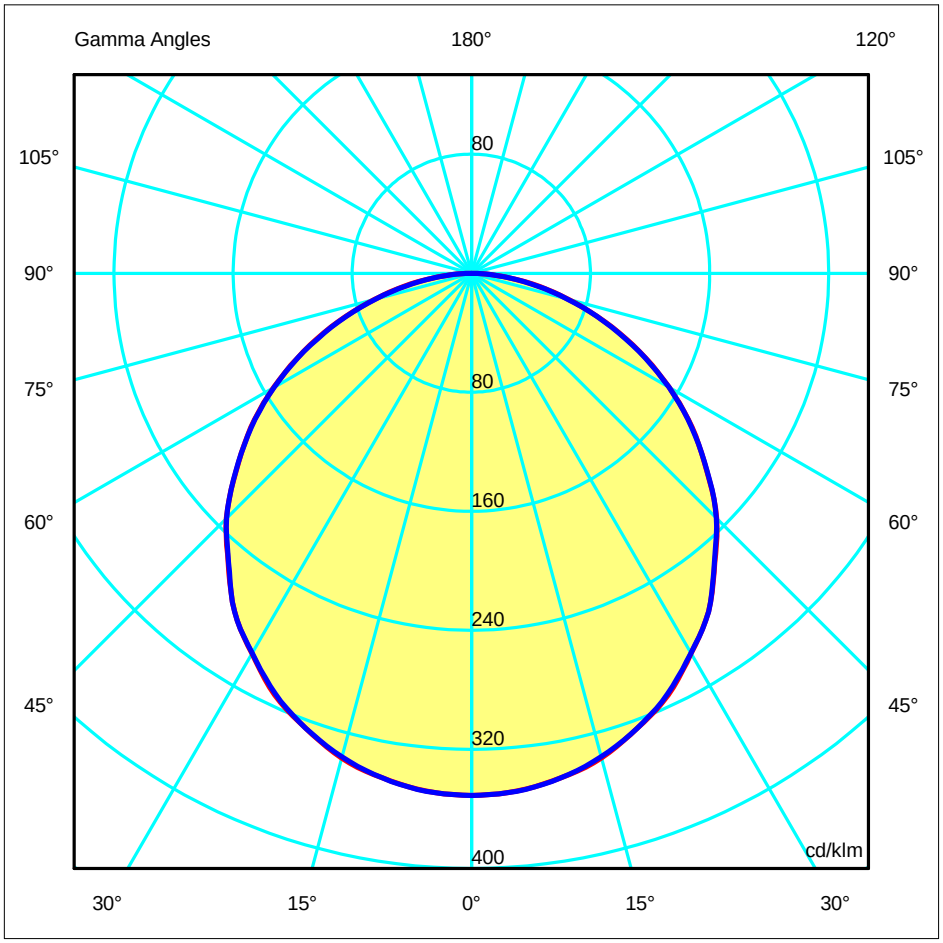

ULOR	0.00 %
DLOR	100.00 %
RN	0.00 %

Luminaire
Code TC-0151-BLA
Name Downlight FORLIGHT 15.5W 4000K
Measurem.
Code TC-0150-BLA
Name Downlight FORLIGHT 15.5W 3000K

Luminaire Flux	1508.27 lm	Luminaire Power	17.00 W	Efficacy	88.72 lm/W	Efficiency	100.00%
Lamps Flux	1508.28 lm	Maximum value	350.90 cd/klm	Position	C=0.00 G=0.00	CG	Double Symmetrical

Luminous Intensity Table cd/klm **Table 1/1**

	C 0.00	C 15.00	C 30.00	C 45.00	C 60.00	C 75.00	C 90.00
G 0.0	350.90	350.90	350.90	350.90	350.90	350.90	350.90
G 5.0	349.21	349.22	349.31	349.18	349.27	349.16	349.30
G 10.0	344.38	344.40	344.43	344.48	344.33	344.32	344.33
G 15.0	337.20	336.33	336.48	336.29	336.34	336.34	336.35
G 20.0	325.36	325.63	325.35	325.83	325.27	325.47	325.23
G 25.0	312.72	311.30	312.42	311.87	311.45	311.49	311.76
G 30.0	294.98	295.54	294.86	295.33	295.11	295.38	294.65
G 35.0	277.47	276.07	277.22	276.30	276.70	276.26	277.49
G 40.0	254.17	255.78	254.22	254.92	255.80	255.45	253.71
G 45.0	232.82	231.65	232.59	231.50	232.74	231.39	232.53
G 50.0	206.34	207.65	205.74	207.04	207.51	207.44	206.61
G 55.0	181.02	180.56	181.06	180.57	180.57	180.85	180.54
G 60.0	153.33	153.32	152.62	152.91	152.40	152.52	152.97
G 65.0	124.65	124.05	124.30	124.06	123.96	123.83	123.92
G 70.0	95.35	95.42	95.36	95.15	94.71	94.92	94.72
G 75.0	67.32	67.39	67.32	66.83	66.64	66.71	66.46
G 80.0	41.59	41.15	41.34	40.55	40.54	40.28	40.05
G 85.0	17.59	18.31	17.53	17.73	17.30	17.91	17.13
G 90.0	0.96	0.98	0.96	1.01	0.94	0.98	0.95

Luminaire
Code TC-0151-BLA
Name Downlight FORLIGHT 15.5W 4000K
Measurem.
Code TC-0150-BLA
Name Downlight FORLIGHT 15.5W 3000K

Luminaire Flux	1508.27 lm	Luminaire Power	17.00 W	Efficacy	88.72 lm/W	Efficiency	100.00%
Lamps Flux	1508.28 lm	Maximum value	350.90 cd/klm	Position	C=0.00 G=0.00	CG	Double Symmetrical

Diam=225mm

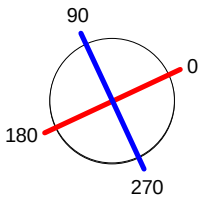

C Halfplanes



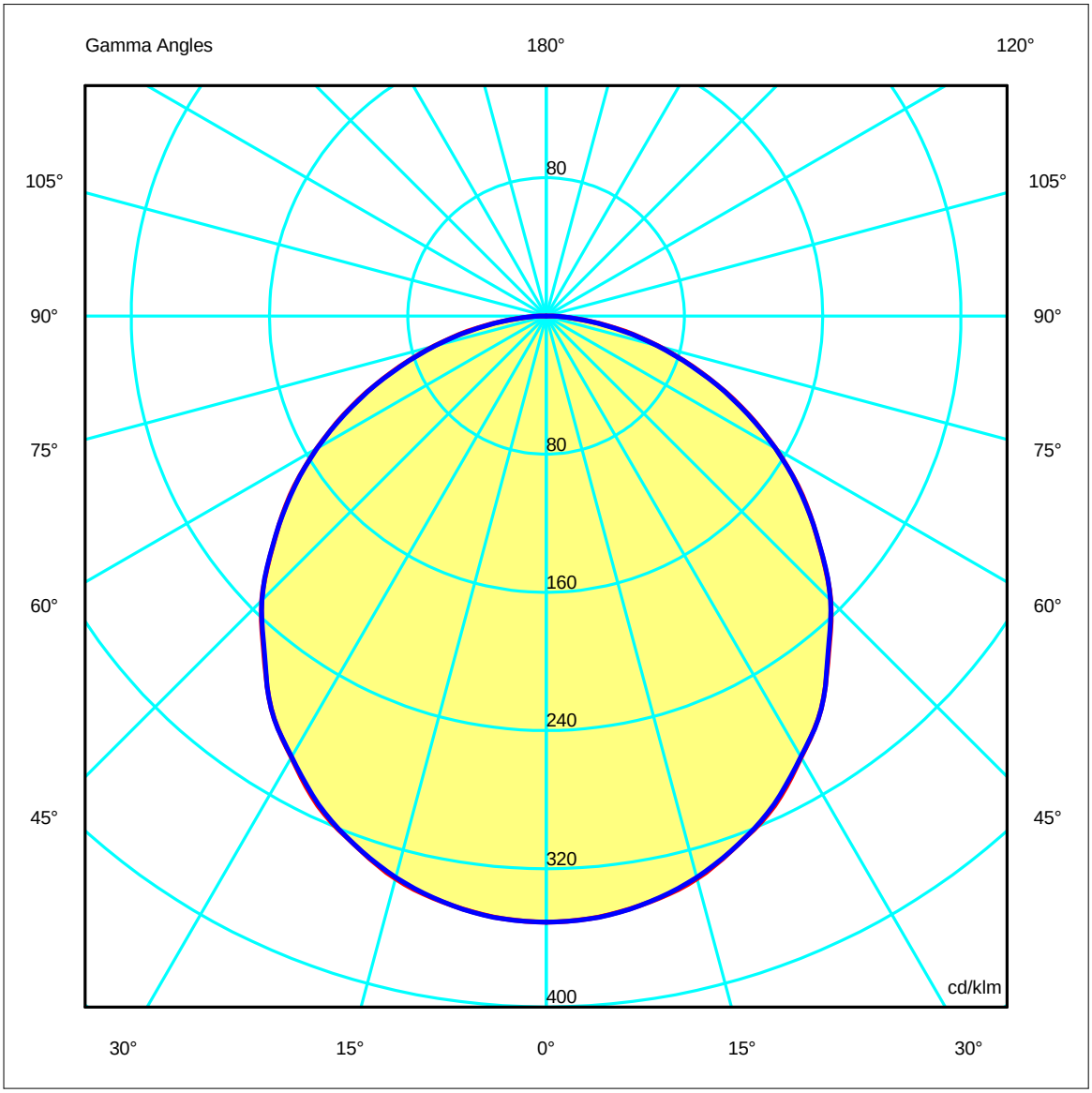

Luminaire
Code TC-0151-BLA
Name Downlight FORLIGHT 15.5W 4000K
Measurem.
Code TC-0150-BLA
Name Downlight FORLIGHT 15.5W 3000K

Luminaire Flux	1508.27 lm	Luminaire Power	17.00 W	Efficacy	88.72 lm/W	Efficiency	100.00%
Lamps Flux	1508.28 lm	Maximum value	350.90 cd/klm	Position	C=0.00 G=0.00	CG	Double Symmetrical

Width at 50.00 % of Max Intensity

H[m]	1.00	2.00	3.00	4.00	5.00	H[m]	1.00	2.00	3.00	4.00	5.00
OA	1.49	2.97	4.46	5.94	7.43	OC	1.48	2.96	4.44	5.92	7.40
OB	1.49	2.97	4.46	5.94	7.43	OD	1.48	2.96	4.44	5.92	7.40

Luminous Intensities [cd/klm]

	0	5	15	25	35	45	55	65	75	85
OA	529.26	526.71	508.60	471.67	418.51	351.15	273.03	188.01	101.54	26.54
OB	529.26	526.71	508.60	471.67	418.51	351.15	273.03	188.01	101.54	26.54
OC	529.26	526.85	507.30	470.22	418.53	350.72	272.31	186.91	100.25	25.83
OD	529.26	526.85	507.30	470.22	418.53	350.72	272.31	186.91	100.25	25.83

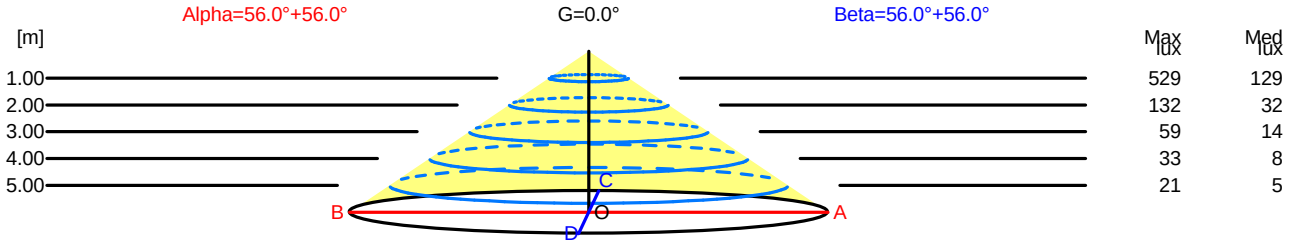

H[m]	D[m]	Max lux	Med lux
1.00	2.97	529	129
2.00	5.94	132	32
3.00	8.91	59	14
4.00	11.88	33	8
5.00	14.85	21	5

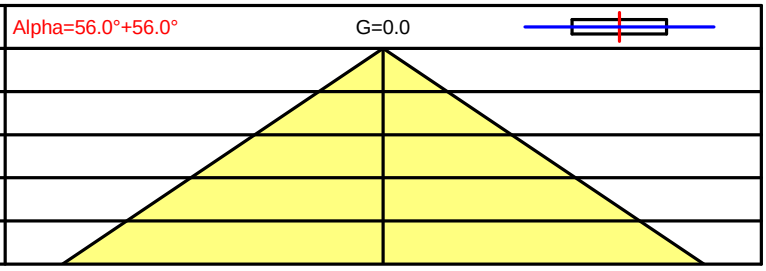

H[m]	D[m]	Max lux	Med lux
1.00	2.96	529	129
2.00	5.92	132	32
3.00	8.88	59	14
4.00	11.84	33	8
5.00	14.80	21	5

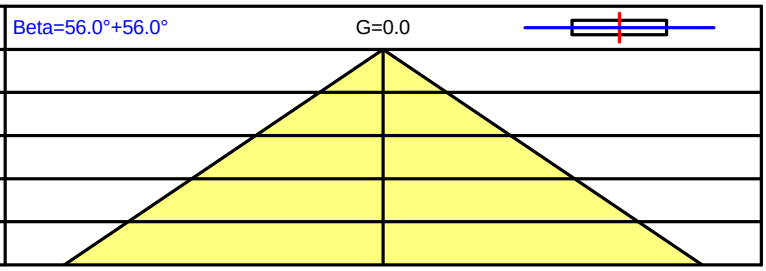

Luminaire
Code TC-0151-BLA
Name Downlight FORLIGHT 15.5W 4000K
Measurem.
Code TC-0150-BLA
Name Downlight FORLIGHT 15.5W 3000K

Luminaire Flux	1508.27 lm	Luminaire Power	17.00 W	Efficacy	88.72 lm/W	Efficiency	100.00%
Lamps Flux	1508.28 lm	Maximum value	350.90 cd/klm	Position	C=0.00 G=0.00	CG	Double Symmetrical

UGR
S = 0.250

Reflectancies										
Ceiling/Cavity	0.7	0.7	0.5	0.5	0.3	0.7	0.7	0.5	0.5	0.3
Walls	0.5	0.3	0.5	0.3	0.3	0.5	0.3	0.5	0.3	0.3
WorkingPlane	0.2	0.2	0.2	0.2	0.2	0.2	0.2	0.2	0.2	0.2
RoomDimensions	ViewedCrosswise					ViewedEndwise				
x=2H y=2H	22.8	24.2	23.1	24.4	24.6	22.8	24.1	23.1	24.4	24.6
x=2H y=3H	24.5	25.7	24.8	25.9	26.2	24.4	25.7	24.8	25.9	26.2
x=2H y=4H	25.1	26.3	25.5	26.5	26.8	25.1	26.2	25.4	26.5	26.8
x=2H y=6H	25.6	26.7	26.0	27.0	27.3	25.6	26.6	25.9	26.9	27.3
x=2H y=8H	25.8	26.8	26.2	27.1	27.4	25.7	26.8	26.1	27.1	27.4
x=2H y=12H	25.9	26.9	26.3	27.2	27.5	25.8	26.8	26.2	27.1	27.5
x=4H y=2H	23.6	24.7	23.9	25.0	25.3	23.6	24.7	23.9	25.0	25.3
x=4H y=3H	25.4	26.4	25.8	26.7	27.0	25.4	26.4	25.8	26.7	27.0
x=4H y=4H	26.2	27.1	26.6	27.4	27.8	26.2	27.0	26.6	27.4	27.8
x=4H y=6H	26.8	27.6	27.3	28.0	28.3	26.8	27.5	27.2	27.9	28.3
x=4H y=8H	27.1	27.8	27.5	28.1	28.5	27.0	27.7	27.4	28.1	28.5
x=4H y=12H	27.2	27.9	27.7	28.3	28.6	27.1	27.8	27.6	28.2	28.6
x=8H y=4H	26.6	27.3	27.0	27.6	28.0	26.5	27.2	27.0	27.6	28.0
x=8H y=6H	27.3	27.9	27.8	28.3	28.7	27.3	27.8	27.7	28.3	28.7
x=8H y=8H	27.6	28.1	28.1	28.6	29.0	27.6	28.1	28.0	28.5	29.0
x=8H y=12H	27.9	28.3	28.4	28.8	29.2	27.8	28.2	28.3	28.7	29.2
x=12H y=4H	26.6	27.2	27.0	27.6	28.0	26.6	27.2	27.0	27.6	28.0
x=12H y=6H	27.4	27.9	27.9	28.3	28.8	27.4	27.8	27.8	28.3	28.8
x=12H y=8H	27.7	28.2	28.2	28.6	29.1	27.7	28.1	28.2	28.6	29.1

Luminaire
Code TC-0151-BLA
Name Downlight FORLIGHT 15.5W 4000K
Measurem.
Code TC-0150-BLA
Name Downlight FORLIGHT 15.5W 3000K

Luminaire Flux	1508.27 lm	Luminaire Power	17.00 W	Efficacy	88.72 lm/W	Efficiency	100.00%
Lamps Flux	1508.28 lm	Maximum value	350.90 cd/klm	Position	C=0.00 G=0.00	CG	Double Symmetrical

Diam=225mm

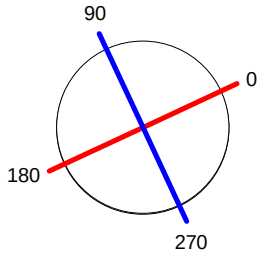

C Halfplanes

180.0 0.0
270.0 90.0

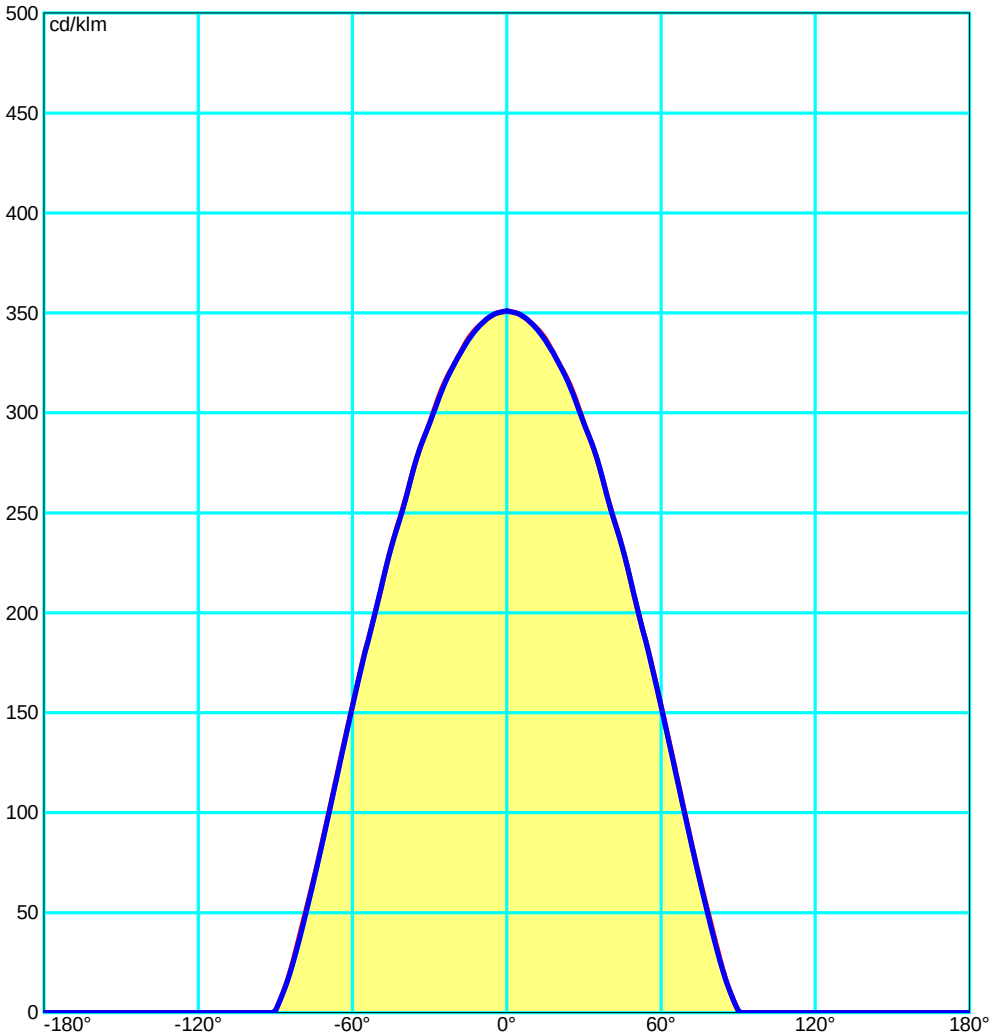

Luminaire
Code TC-0151-BLA
Name Downlight FORLIGHT 15.5W 4000K
Measurem.
Code TC-0150-BLA
Name Downlight FORLIGHT 15.5W 3000K

Luminaire Flux	1508.27 lm	Luminaire Power	17.00 W	Efficacy	88.72 lm/W	Efficiency	100.00%
Lamps Flux	1508.28 lm	Maximum value	350.90 cd/klm	Position	C=0.00 G=0.00	CG	Double Symmetrical

Luminance

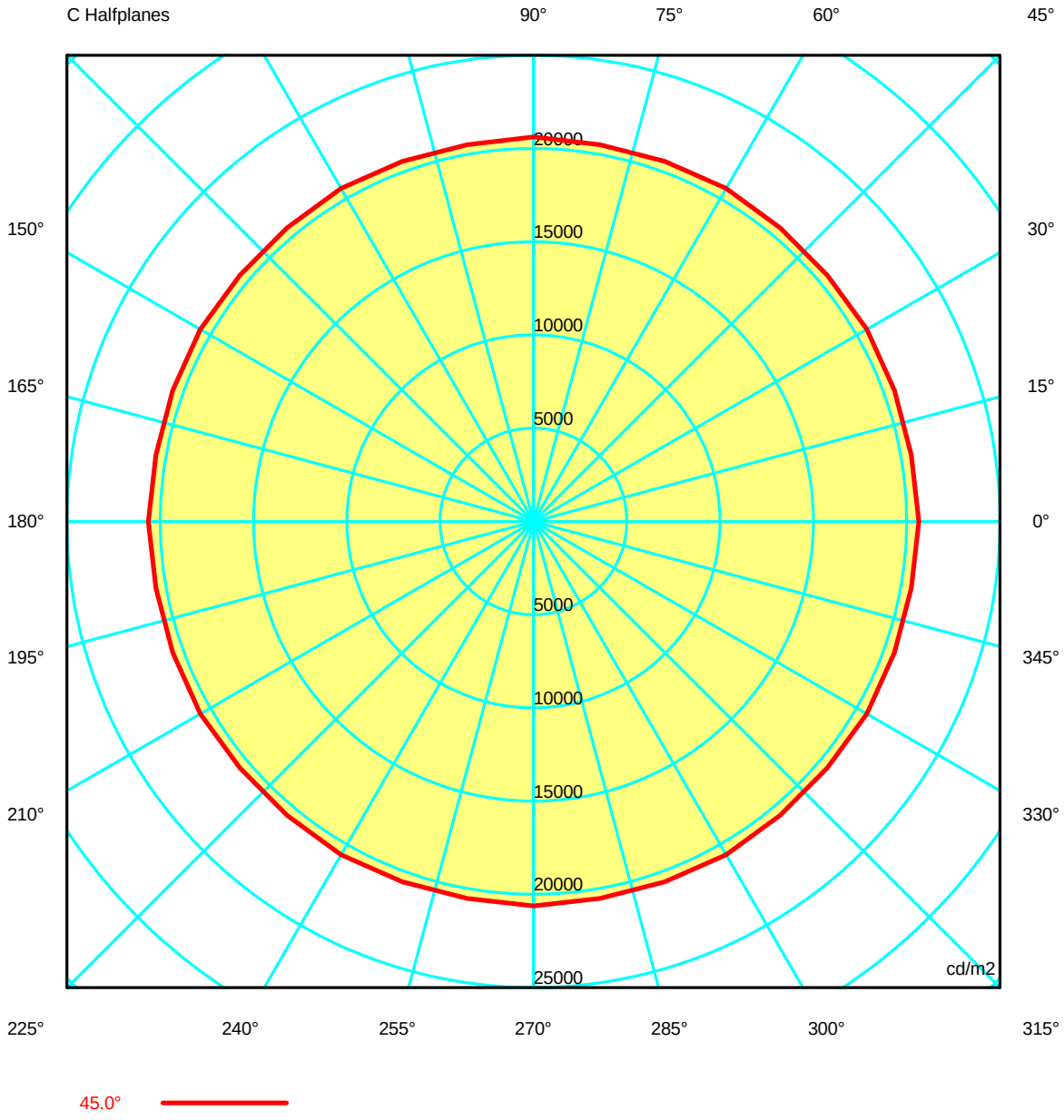

Luminaire
Code TC-0151-BLA
Name Downlight FORLIGHT 15.5W 4000K
Measurem.
Code TC-0150-BLA
Name Downlight FORLIGHT 15.5W 3000K

Luminaire Flux	1508.27 lm	Luminaire Power	17.00 W	Efficacy	88.72 lm/W	Efficiency	100.00%
Lamps Flux	1508.28 lm	Maximum value	350.90 cd/klm	Position	C=0.00 G=0.00	CG	Double Symmetrical

Luminance cd/m2 **Table 1/3**

	C 0.00	C 10.00	C 20.00	C 30.00	C 40.00	C 50.00	C 60.00	C 70.00	C 80.00	C 90.00	C 100.00	C 110.00	C 120.00
G 0.0	22003.85	22003.85	22003.85	22003.85	22003.85	22003.85	22003.85	22003.85	22003.85	22003.85	22003.85	22003.85	22003.85
G 5.0	21981.47	21981.91	21984.75	21987.80	21981.43	21980.72	21985.28	21980.37	21979.17	21987.30	21979.17	21980.37	21985.28
G 10.0	21928.26	21928.85	21929.54	21931.48	21934.83	21931.98	21924.88	21924.34	21924.46	21924.65	21924.46	21924.34	21924.88
G 15.0	21890.85	21845.87	21833.80	21843.77	21836.47	21832.76	21834.98	21834.99	21835.01	21835.06	21835.01	21834.99	21834.98
G 20.0	21711.27	21728.86	21721.88	21711.14	21736.01	21734.29	21705.64	21712.38	21718.25	21702.78	21718.25	21712.38	21705.64
G 25.0	21636.67	21550.78	21557.45	21615.90	21599.38	21562.12	21548.61	21548.40	21556.93	21570.46	21556.93	21548.40	21548.61
G 30.0	21359.05	21397.41	21383.81	21349.73	21371.89	21381.99	21367.82	21383.61	21379.04	21334.85	21379.04	21383.61	21367.82
G 35.0	21240.76	21144.55	21158.82	21221.68	21175.43	21153.14	21181.33	21155.05	21163.46	21241.91	21163.46	21155.05	21181.33
G 40.0	20806.06	20924.07	20904.74	20809.62	20831.00	20899.79	20939.35	20933.77	20871.74	20768.36	20871.74	20933.77	20939.35
G 45.0	20646.37	20551.96	20571.00	20626.34	20551.20	20559.99	20639.20	20559.96	20523.57	20620.69	20523.57	20559.96	20639.20
G 50.0	20128.86	20254.41	20199.86	20070.45	20139.30	20230.78	20243.54	20244.48	20216.60	20156.02	20216.60	20244.48	20243.54
G 55.0	19790.21	19742.73	19756.26	19793.99	19763.09	19731.20	19741.03	19765.83	19766.80	19738.07	19766.80	19765.83	19741.03
G 60.0	19230.19	19228.99	19196.53	19140.17	19166.53	19163.54	19112.69	19112.45	19145.48	19184.66	19145.48	19112.45	19112.69
G 65.0	18495.36	18421.52	18413.36	18442.85	18422.87	18398.62	18392.11	18378.70	18374.94	18386.88	18374.94	18378.70	18392.11
G 70.0	17482.19	17492.71	17492.92	17482.84	17464.86	17413.15	17364.89	17388.66	17401.50	17366.21	17401.50	17388.66	17364.89
G 75.0	16310.11	16321.09	16330.03	16309.96	16232.93	16163.68	16144.52	16160.21	16151.37	16102.66	16151.37	16160.21	16144.52
G 80.0	15018.84	14878.27	14891.07	14930.11	14735.98	14641.53	14639.45	14588.68	14512.69	14461.74	14512.69	14588.68	14639.45
G 85.0	12657.81	13131.50	13018.56	12614.43	12712.81	12656.21	12450.05	12764.14	12821.77	12322.08	12821.77	12764.14	12450.05
G 90.0	0.00	0.00	0.00	0.00	0.00	0.00	0.00	0.00	0.00	0.00	0.00	0.00	0.00

Luminaire
Code TC-0151-BLA
Name Downlight FORLIGHT 15.5W 4000K
Measurem.
Code TC-0150-BLA
Name Downlight FORLIGHT 15.5W 3000K

Luminaire Flux	1508.27 lm	Luminaire Power	17.00 W	Efficacy	88.72 lm/W	Efficiency	100.00%
Lamps Flux	1508.28 lm	Maximum value	350.90 cd/klm	Position	C=0.00 G=0.00	CG	Double Symmetrical

Luminance cd/m2 **Table 2/3**

	C 130.00	C 140.00	C 150.00	C 160.00	C 170.00	C 180.00	C 190.00	C 200.00	C 210.00	C 220.00	C 230.00	C 240.00	C 250.00
G 0.0	22003.85	22003.85	22003.85	22003.85	22003.85	22003.85	22003.85	22003.85	22003.85	22003.85	22003.85	22003.85	22003.85
G 5.0	21980.72	21981.43	21987.80	21984.75	21981.91	21981.47	21981.91	21984.75	21987.80	21981.43	21980.72	21985.28	21980.37
G 10.0	21931.98	21934.83	21931.48	21929.54	21928.85	21928.26	21928.85	21929.54	21931.48	21934.83	21931.98	21924.88	21924.34
G 15.0	21832.76	21836.47	21843.77	21833.80	21845.87	21890.85	21845.87	21833.80	21843.77	21836.47	21832.76	21834.98	21834.99
G 20.0	21734.29	21736.01	21711.14	21721.88	21728.86	21711.27	21728.86	21721.88	21711.14	21736.01	21734.29	21705.64	21712.38
G 25.0	21562.12	21599.38	21615.90	21557.45	21550.78	21636.67	21550.78	21557.45	21615.90	21599.38	21562.12	21548.61	21548.40
G 30.0	21381.99	21371.89	21349.73	21383.81	21397.41	21359.05	21397.41	21383.81	21349.73	21371.89	21381.99	21367.82	21383.61
G 35.0	21153.14	21175.43	21221.68	21158.82	21144.55	21240.76	21144.55	21158.82	21221.68	21175.43	21153.14	21181.33	21155.05
G 40.0	20899.79	20831.00	20809.62	20904.74	20924.07	20806.06	20924.07	20904.74	20809.62	20831.00	20899.79	20939.35	20933.77
G 45.0	20559.99	20551.20	20626.34	20571.00	20551.96	20646.37	20551.96	20571.00	20626.34	20551.20	20559.99	20639.20	20559.96
G 50.0	20230.78	20139.30	20070.45	20199.86	20254.41	20128.86	20254.41	20199.86	20070.45	20139.30	20230.78	20243.54	20244.48
G 55.0	19731.20	19763.09	19793.99	19756.26	19742.73	19790.21	19742.73	19756.26	19793.99	19763.09	19731.20	19741.03	19765.83
G 60.0	19163.54	19166.53	19140.17	19196.53	19228.99	19230.19	19228.99	19196.53	19140.17	19166.53	19163.54	19112.69	19112.45
G 65.0	18398.62	18422.87	18442.85	18413.36	18421.52	18495.36	18421.52	18413.36	18442.85	18422.87	18398.62	18392.11	18378.70
G 70.0	17413.15	17464.86	17482.84	17492.92	17492.71	17482.19	17492.71	17492.92	17482.84	17464.86	17413.15	17364.89	17388.66
G 75.0	16163.68	16232.93	16309.96	16330.03	16321.09	16310.11	16321.09	16330.03	16309.96	16232.93	16163.68	16144.52	16160.21
G 80.0	14641.53	14735.98	14930.11	14891.07	14878.27	15018.84	14878.27	14891.07	14930.11	14735.98	14641.53	14639.45	14588.68
G 85.0	12656.21	12712.81	12614.43	13018.56	13131.50	12657.81	13131.50	13018.56	12614.43	12712.81	12656.21	12450.05	12764.14
G 90.0	0.00	0.00	0.00	0.00	0.00	0.00	0.00	0.00	0.00	0.00	0.00	0.00	0.00

Luminaire
Code TC-0151-BLA
Name Downlight FORLIGHT 15.5W 4000K
Measurem.
Code TC-0150-BLA
Name Downlight FORLIGHT 15.5W 3000K

Luminaire Flux	1508.27 lm	Luminaire Power	17.00 W	Efficacy	88.72 lm/W	Efficiency 100.00%
Lamps Flux	1508.28 lm	Maximum value	350.90 cd/klm	Position	C=0.00 G=0.00	CG Double Symmetrical

Luminance cd/m2 **Table 3/3**

	C 260.00	C 270.00	C 280.00	C 290.00	C 300.00	C 310.00	C 320.00	C 330.00	C 340.00	C 350.00
G 0.0	22003.85	22003.85	22003.85	22003.85	22003.85	22003.85	22003.85	22003.85	22003.85	22003.85
G 5.0	21979.17	21987.30	21979.17	21980.37	21985.28	21980.72	21981.43	21987.80	21984.75	21981.91
G 10.0	21924.46	21924.65	21924.46	21924.34	21924.88	21931.98	21934.83	21931.48	21929.54	21928.85
G 15.0	21835.01	21835.06	21835.01	21834.99	21834.98	21832.76	21836.47	21843.77	21833.80	21845.87
G 20.0	21718.25	21702.78	21718.25	21712.38	21705.64	21734.29	21736.01	21711.14	21721.88	21728.86
G 25.0	21556.93	21570.46	21556.93	21548.40	21548.61	21562.12	21599.38	21615.90	21557.45	21550.78
G 30.0	21379.04	21334.85	21379.04	21383.61	21367.82	21381.99	21371.89	21349.73	21383.81	21397.41
G 35.0	21163.46	21241.91	21163.46	21155.05	21181.33	21153.14	21175.43	21221.68	21158.82	21144.55
G 40.0	20871.74	20768.36	20871.74	20933.77	20939.35	20899.79	20831.00	20809.62	20904.74	20924.07
G 45.0	20523.57	20620.69	20523.57	20559.96	20639.20	20559.99	20551.20	20626.34	20571.00	20551.96
G 50.0	20216.60	20156.02	20216.60	20244.48	20243.54	20230.78	20139.30	20070.45	20199.86	20254.41
G 55.0	19766.80	19738.07	19766.80	19765.83	19741.03	19731.20	19763.09	19793.99	19756.26	19742.73
G 60.0	19145.48	19184.66	19145.48	19112.45	19112.69	19163.54	19166.53	19140.17	19196.53	19228.99
G 65.0	18374.94	18386.88	18374.94	18378.70	18392.11	18398.62	18422.87	18442.85	18413.36	18421.52
G 70.0	17401.50	17366.21	17401.50	17388.66	17364.89	17413.15	17464.86	17482.84	17492.92	17492.71
G 75.0	16151.37	16102.66	16151.37	16160.21	16144.52	16163.68	16232.93	16309.96	16330.03	16321.09
G 80.0	14512.69	14461.74	14512.69	14588.68	14639.45	14641.53	14735.98	14930.11	14891.07	14878.27
G 85.0	12821.77	12322.08	12821.77	12764.14	12450.05	12656.21	12712.81	12614.43	13018.56	13131.50
G 90.0	0.00	0.00	0.00	0.00	0.00	0.00	0.00	0.00	0.00	0.00

Luminaire
Code TC-0151-BLA
Name Downlight FORLIGHT 15.5W 4000K
Measurem.
Code TC-0150-BLA
Name Downlight FORLIGHT 15.5W 3000K

Luminaire Flux	1508.27 lm	Luminaire Power	17.00 W	Efficacy	88.72 lm/W	Efficiency	100.00%
Lamps Flux	1508.28 lm	Maximum value	350.90 cd/klm	Position	C=0.00 G=0.00	CG	Double Symmetrical

PERCENTAGE ISOCANDLES

Projection: Equal Area SLI (glare) 6.1 Tight Tilting Angle:0°

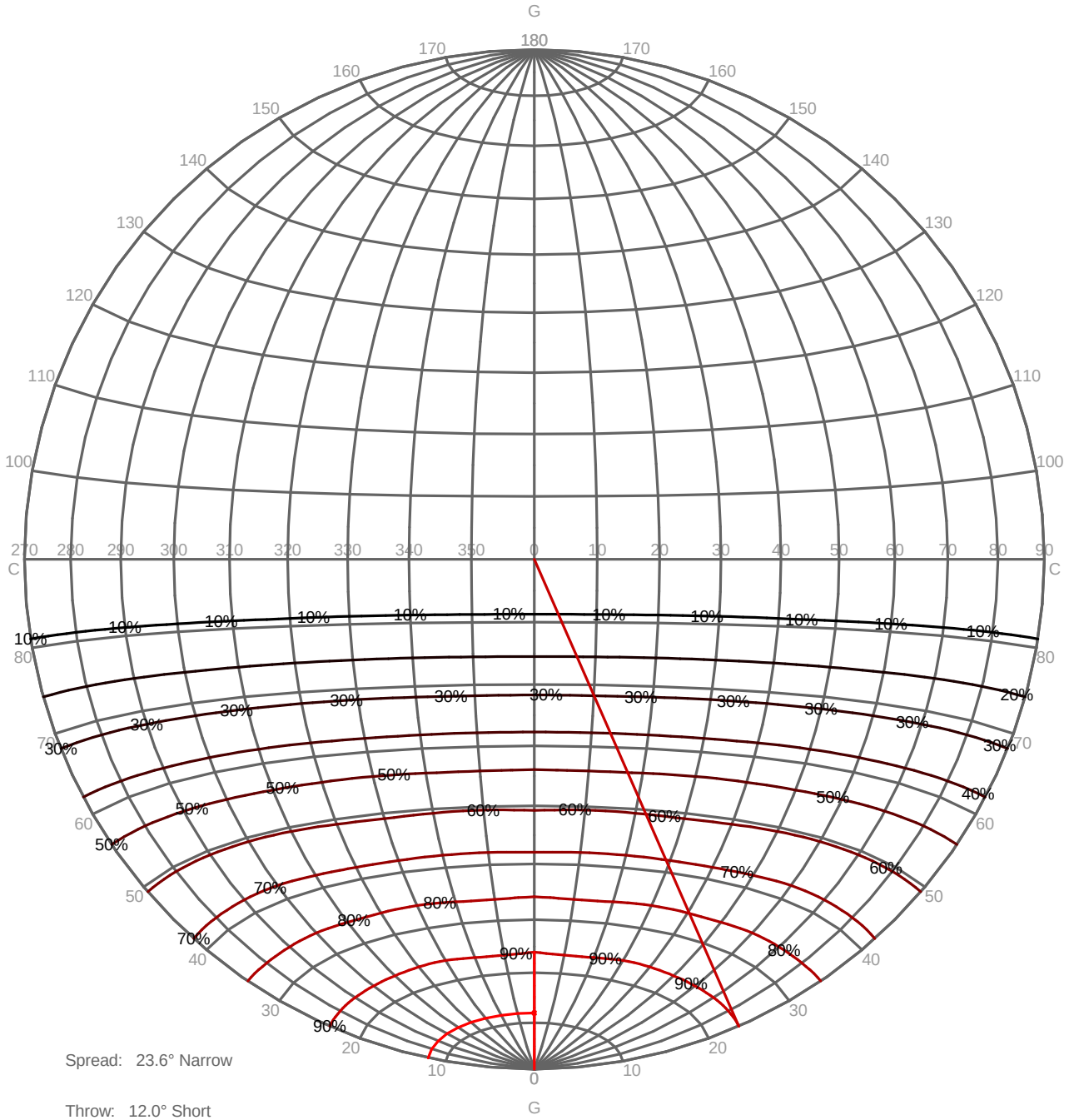

Spread: 23.6° Narrow

Throw: 12.0° Short

Luminaire
Code TC-0151-BLA
Name Downlight FORLIGHT 15.5W 4000K
Measurem.
Code TC-0150-BLA
Name Downlight FORLIGHT 15.5W 3000K

Luminaire Flux	1508.27 lm	Luminaire Power	17.00 W	Efficacy	88.72 lm/W	Efficiency	100.00%
Lamps Flux	1508.28 lm	Maximum value	350.90 cd/klm	Position	C=0.00 G=0.00	CG	Double Symmetrical

Isolux (Floor)

Luminaire position X=0.00m Y=0.00m Z=2.50m

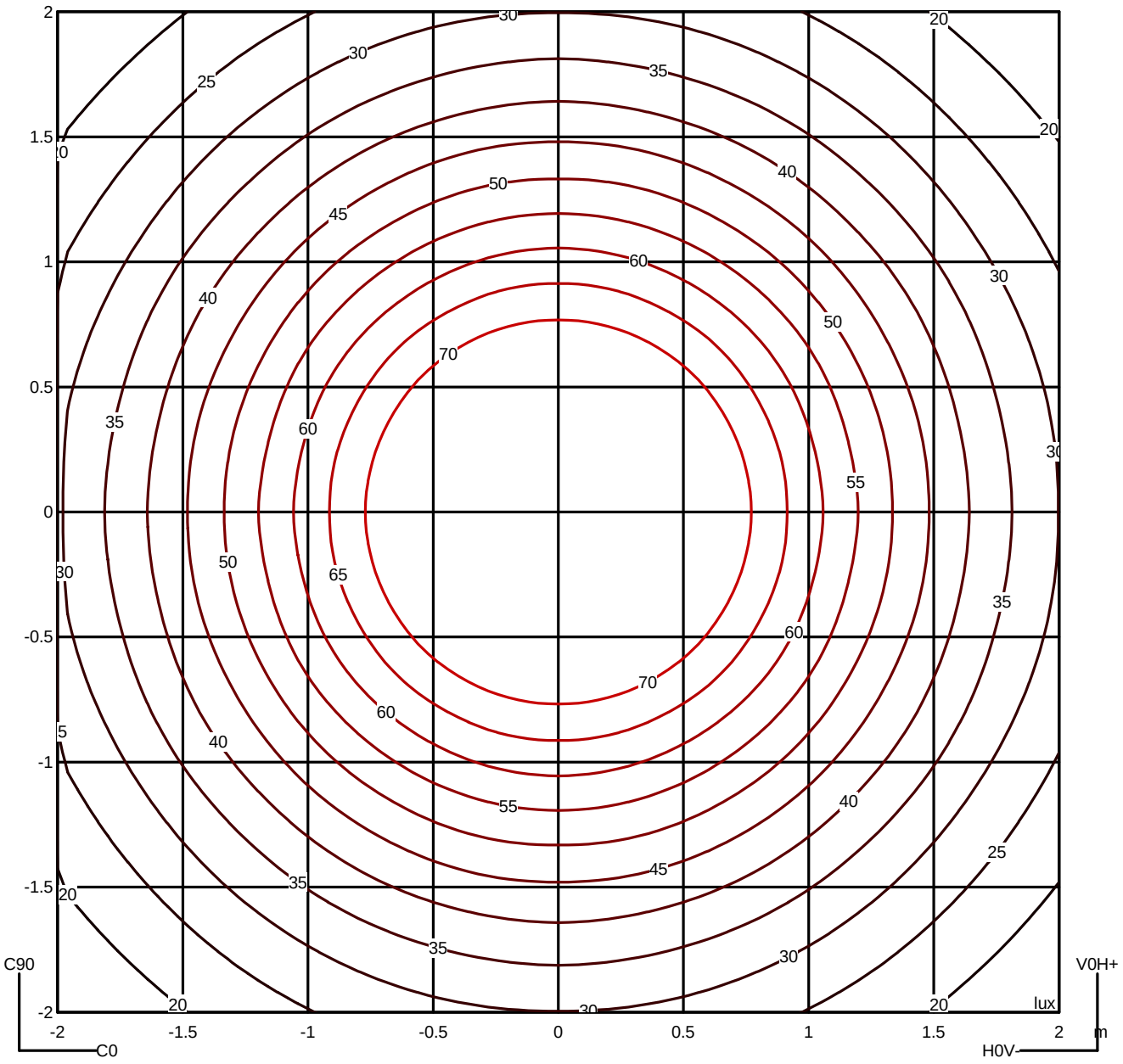

Luminaire
Code TC-0151-BLA
Name Downlight FORLIGHT 15.5W 4000K
Measurem.
Code TC-0150-BLA
Name Downlight FORLIGHT 15.5W 3000K

Luminaire Flux	1508.27 lm	Luminaire Power	17.00 W	Efficacy	88.72 lm/W	Efficiency	100.00%
Lamps Flux	1508.28 lm	Maximum value	350.90 cd/klm	Position	C=0.00 G=0.00	CG	Double Symmetrical

Average Luminance [cd/m²]

	45°	50°	55°	60°	65°	70°	75°	80°	85°	
0.0°	20646	20129	19790	19230	18495	17482	16310	15019	12658	---
90.0°	20621	20156	19738	19185	18387	17366	16103	14462	12322	---

Flush mounted or longitudinal view

		Illumination(lx)										
A	A	2000	1000	750	500		<300					1.15
B	1		2000	1500	1000	750	500	<300				1.5
C					2000		1000	500	<300			1.85
D	2						2000	1000	500	<300		2.2
E	3							2000	1000	500	<300	2.55

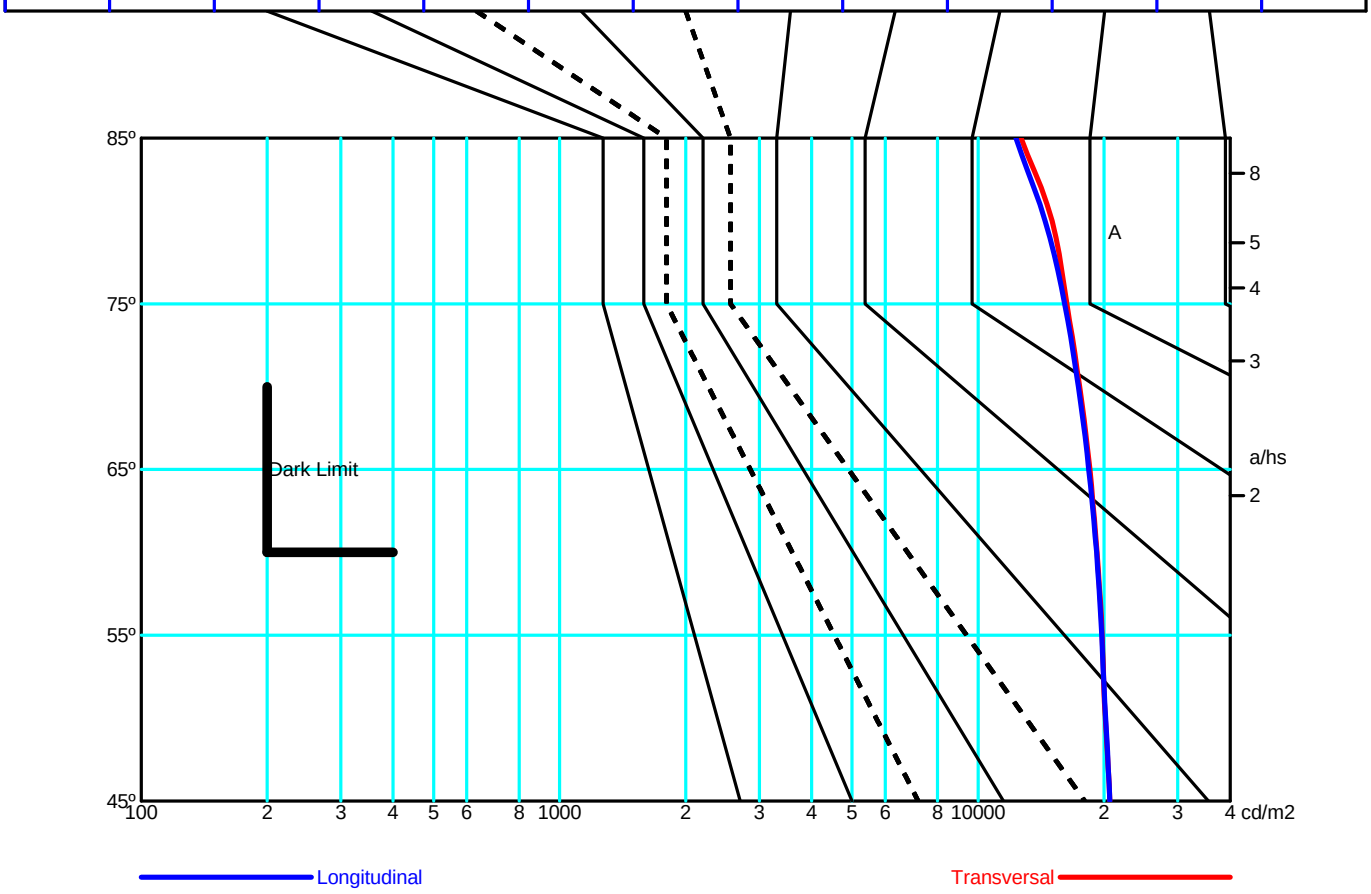

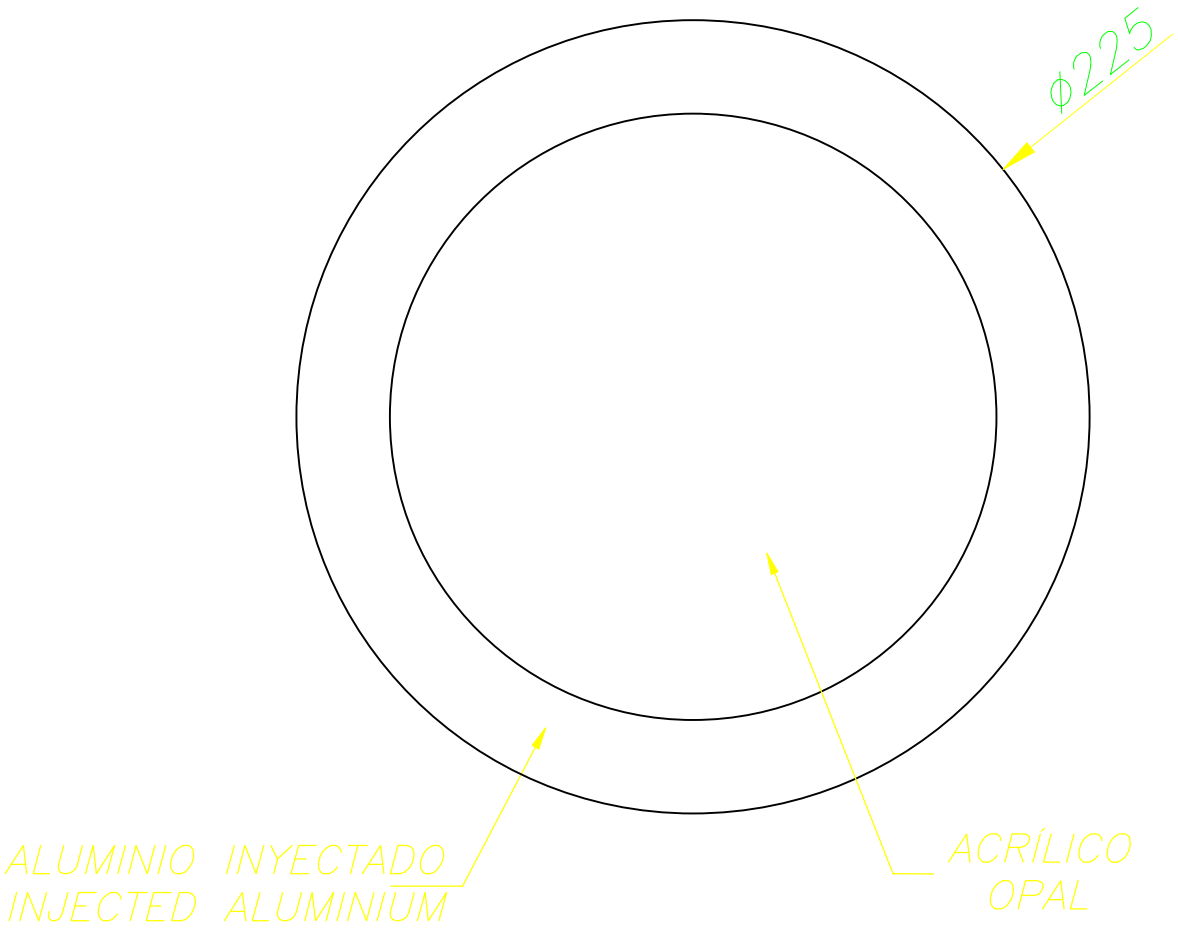

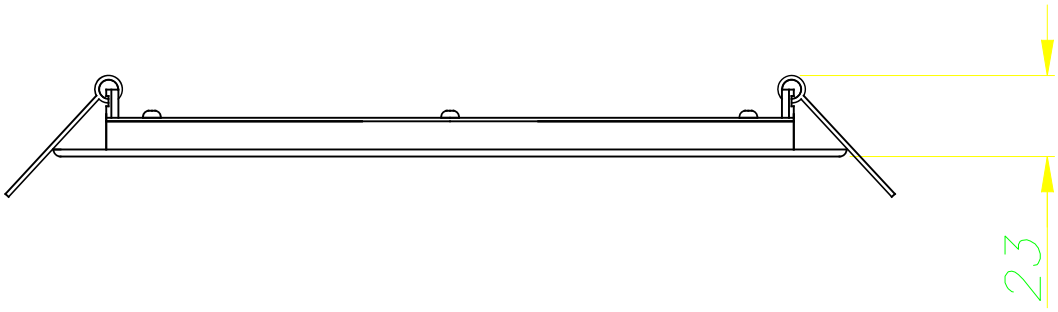

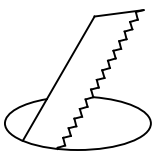

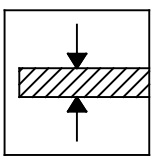

Scale 1:2

11-02-16

Easy


>5 cm
LED
DRIVER
LED
1°
LED DRIVER
2°

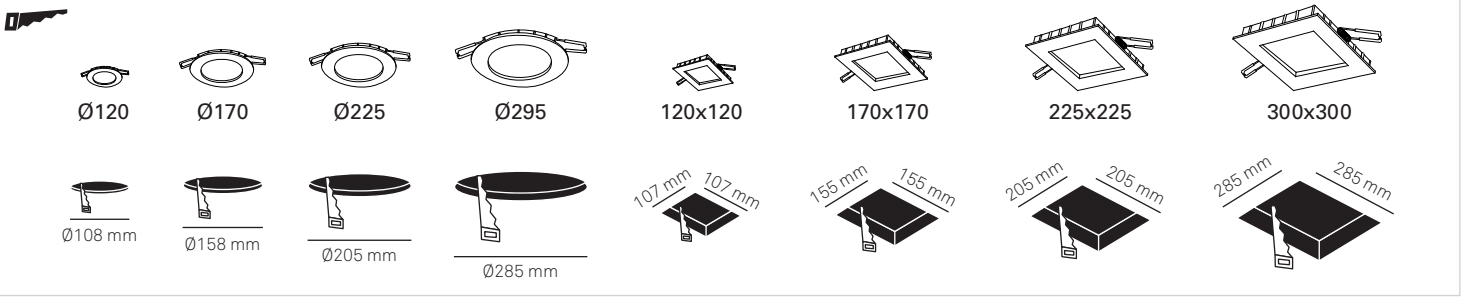
Ø120
Ø170
Ø225
Ø295
120x120
170x170
225x225
300x300
Ø108 mm
Ø158 mm
Ø205 mm
Ø285 mm
107 mm
107 mm
155 mm
155 mm
205 mm
205 mm
285 mm
285 mm

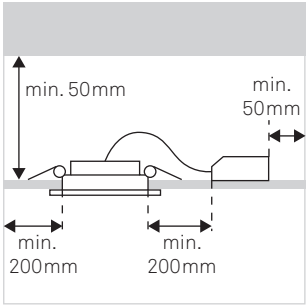
min. 50mm
min. 50mm
min. 200mm
min. 200mm

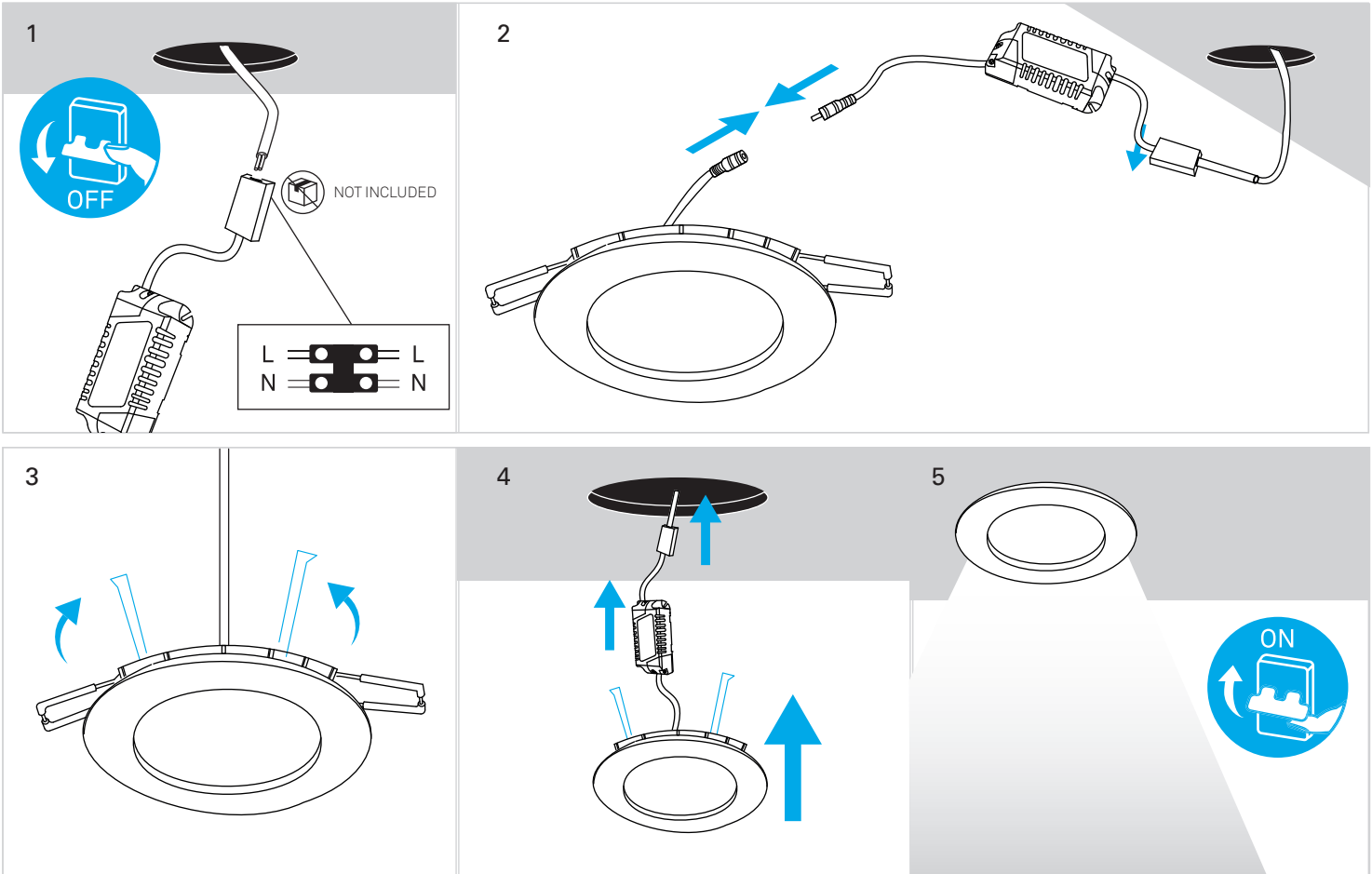
1
OFF
NOT INCLUDED
L
N
L
N
2
3
4
5
ON