Keeper Simple

DE-0479-NEG

Spotlights series Keeper Simple GU10 8W Black



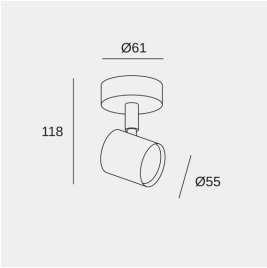

TECHNICAL FEATURES

IP20 355º 90º

Luminaire total power : 8W

Structure material : Steel

Structure finish : Black

Max. size of light bulb : 64/50 mm

Recommended light bulb : GU10

Voltage / frequency : 100-240V ~ 50/60Hz

Warranty : 5 Years

Easily recyclable luminaire

LUMINOTECHNIC FEATURES

Lampholder	Quantity	Light source power (W)	Correlated Colour Temperature (CCT)
GU10	1	Max. power 8W	-

LOGISTICS

Net weight (kg): 0.21

Packaged weight (kg): 0.29

24 Un

Image may not match reference. LEDS C4 reserves the right to amend any of the product's components. The data related to flux, power and colour temperature are subject to a tolerance of ±10%.

DE-0479

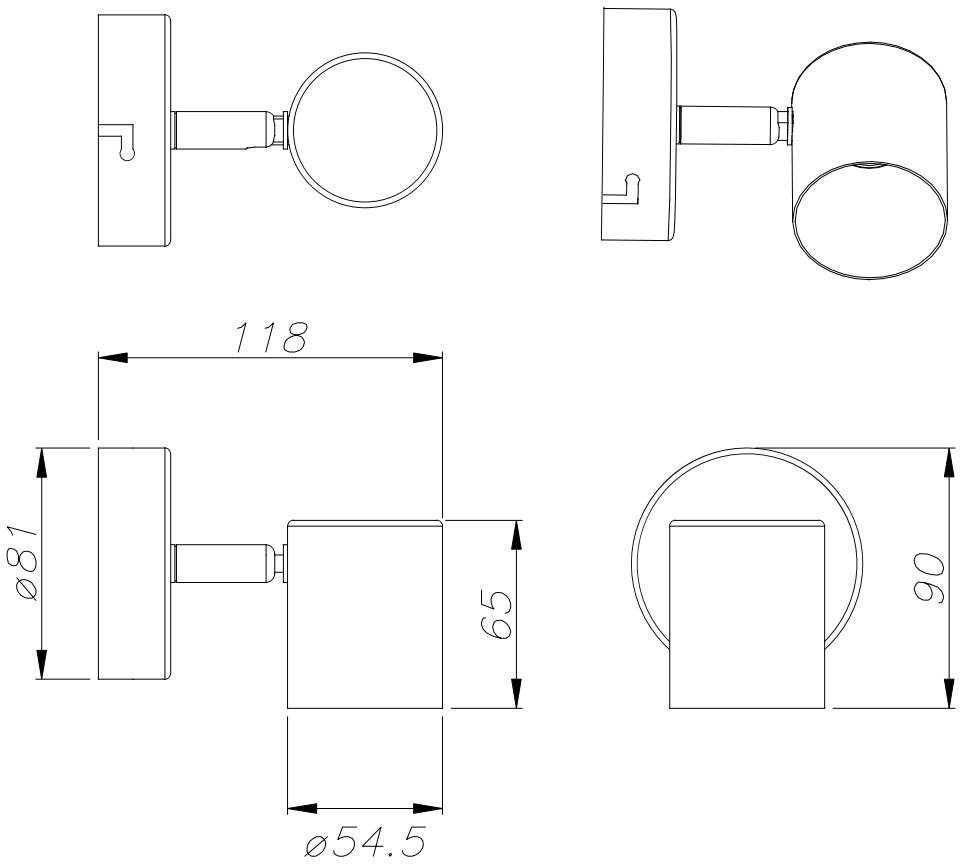

All material Steel
Tot el material Acer

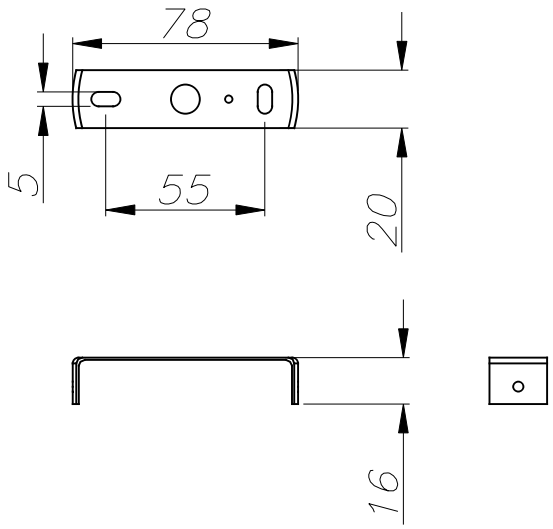

09-10-18

Keeper

DE-0479

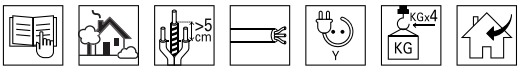

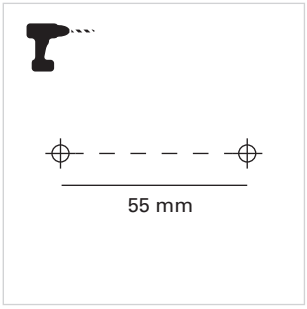

1

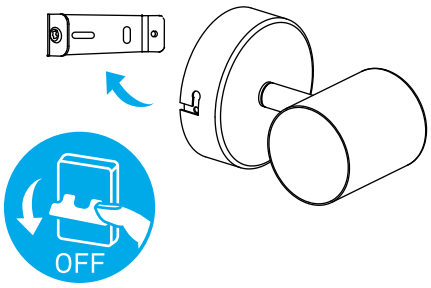

2

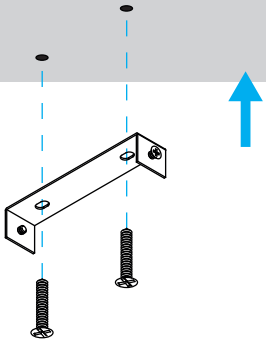

3

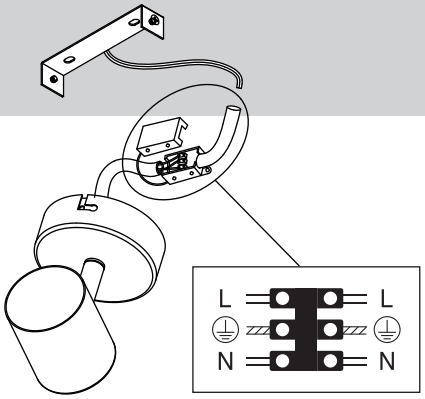

4

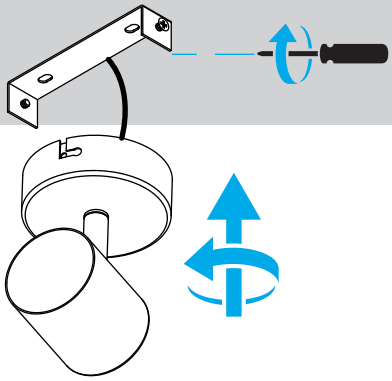

5

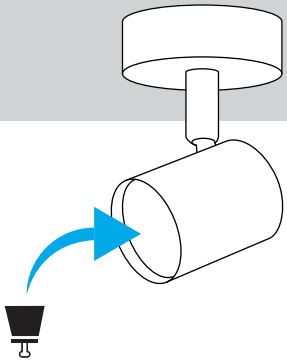

6

