Adur

PX-0240-OXI

Surface-mounted wall light IP23 Adur E27 15W Rusty brown



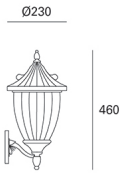

TECHNICAL FEATURES

IP23 IK05

Luminaire total power : 15W

Structure material : Aluminium

Structure finish : Rusty brown

Diffuser material : Glass

Diffuser finish : Transparent

Max. size of light bulb : 167/51 mm

Recommended light bulb : E27

Voltage / frequency : 100-240V ~ 50/60Hz

Warranty : 2 Years

Easily recyclable luminaire

LUMINOTECHNIC FEATURES

Lampholder	Quantity	Light source power (W)	Correlated Colour Temperature (CCT)
E27	1	Max. power 15W	-

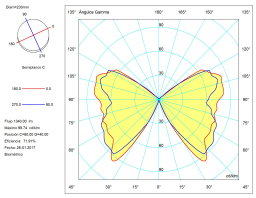

LOGISTICS

Net weight (kg): 2.61

Packaged weight (kg): 3.36

Packaging: 315mm x 250mm x 405mm

4 Un

LIGHT APPLICATION

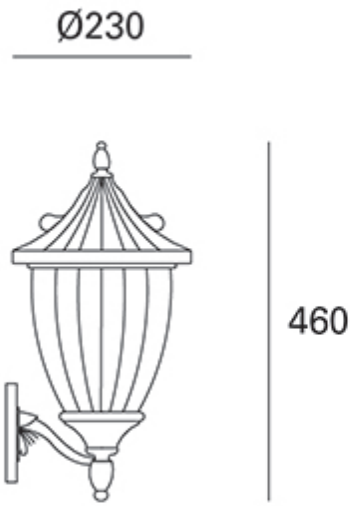

Image may not match reference. LEDS C4 reserves the right to amend any of the product's components. The data related to flux, power and colour temperature are subject to a tolerance of ±10%.

Luminaire
Code PX-0240-OXI
Name Sobremuro ADUR 100W E27
Measurem.
Code PX-0240-OXI
Name Sobremuro ADUR 100W E27

Luminaire Flux	963.59 lm	Luminaire Power	100.00 W	Efficacy	9.64 lm/W	Efficiency	71.91%
Lamps Flux	1340.00 lm	Maximum value	99.74 cd/klm	Position	C=60.00 G=40.00	CG	Double Symmetrical

Round Luminaire	Diam. 230 mm	Height	180 mm
Round Luminous Area	Diam. 230 mm	Height	180 mm
Horizontal Luminous Area	0.041548 m2	Emitting area on Plane 180°	0.041400 m2
Emitting area on Plane 0°	0.041400 m2	Emitting area on Plane 270°	0.041400 m2
Emitting area on Plane 90°	0.041400 m2	Glare area at 76°	0.050222 m2
Coordinate system	CG	Symmetry Type	Double Symmetrical
Date	26-01-2017	Maximum Gamma Angle	180
Measurement Distance	0.00	Measurement Flux	1340.00 lm
Operator		Source Voltage [V]	
Temperature	25.00 °C	Source current [A]	
Humidity	60.00 %	Photocell	
Notes			

Luminaire Lamps

Line	Code	Name	Flux [lm]	Pow. [W]	Q.ty
	STANDAR GOC 100W O	STANDAR GOC 100W O	1340.00	100.00	1

C.I.E.	17 47 74 59 72	D DIN 5040	C11
F UTE	0.43 J + 0.29 T	B NBN	BZ 10 / 0.8 / BZ 9

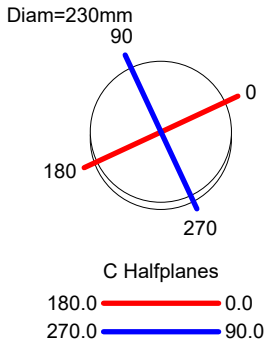

ULOR 29.26 %
DLOR 42.65 %
RN 40.69 %

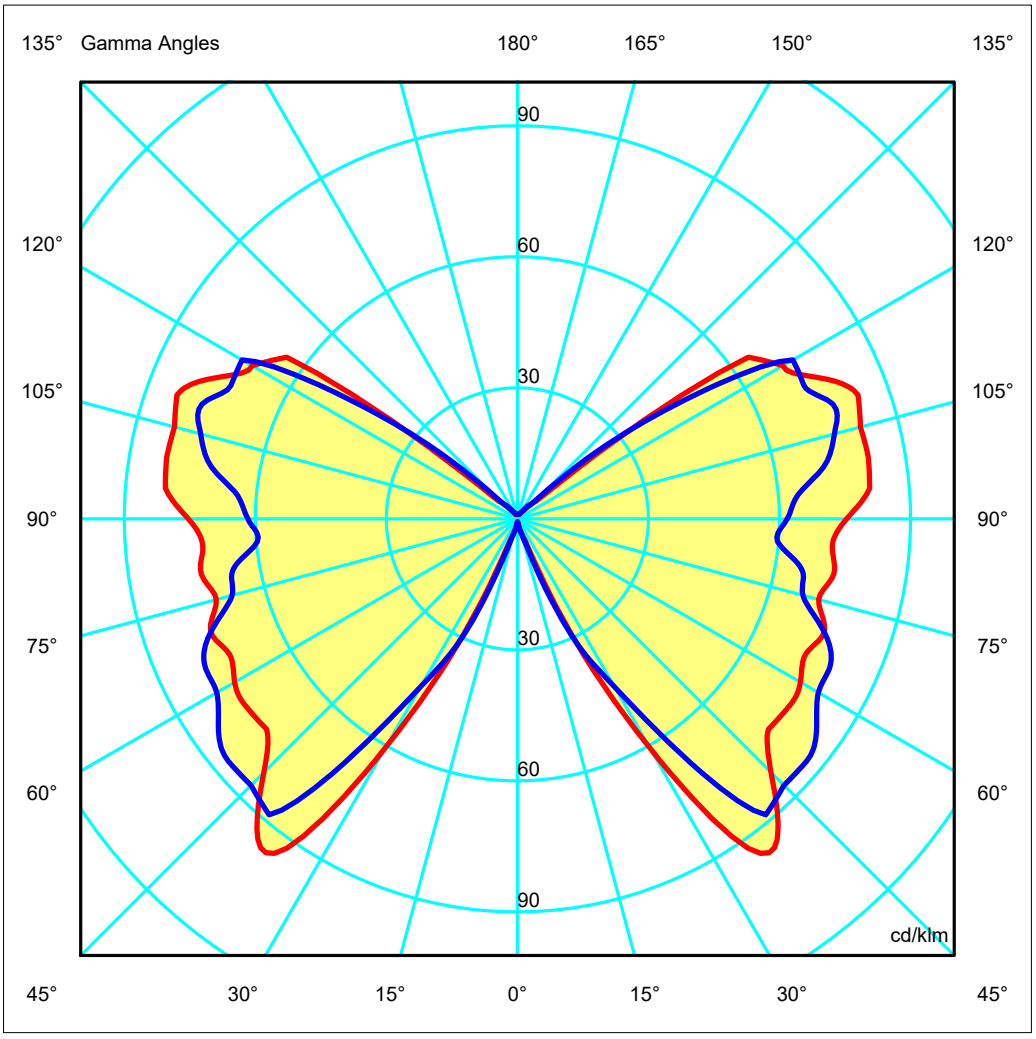

Luminaire
Code PX-0240-OXI
Name Sobremuro ADUR 100W E27
Measurem.
Code PX-0240-OXI
Name Sobremuro ADUR 100W E27

Luminaire Flux	963.59 lm	Luminaire Power	100.00 W	Efficacy	9.64 lm/W	Efficiency	71.91%
Lamps Flux	1340.00 lm	Maximum value	99.74 cd/klm	Position	C=60.00 G=40.00	CG	Double Symmetrical

Luminous Intensity Table cd/klm **Table 1/1**

	C 0.00	C 15.00	C 30.00	C 45.00	C 60.00	C 75.00	C 90.00
G 0.0	0.63	0.63	0.63	0.63	0.63	0.63	0.63
G 5.0	0.90	0.83	0.96	0.83	0.99	0.83	0.93
G 10.0	1.82	1.88	1.93	1.96	1.97	1.93	1.91
G 15.0	3.21	3.39	3.54	3.55	3.60	3.59	3.58
G 20.0	5.64	8.15	6.28	8.95	7.96	8.63	10.00
G 25.0	28.98	36.16	30.70	35.24	34.19	29.36	29.84
G 30.0	60.60	55.25	51.92	51.43	54.90	43.53	44.37
G 35.0	92.04	77.09	82.41	73.24	82.64	61.06	66.55
G 40.0	92.79	91.00	89.69	90.10	99.74	84.01	88.45
G 45.0	82.13	79.82	78.83	88.96	89.44	89.72	86.25
G 50.0	74.96	73.88	78.37	81.40	84.24	81.63	86.37
G 55.0	75.49	75.05	77.81	78.93	82.00	81.87	83.60
G 60.0	74.78	74.83	76.88	76.77	79.09	79.26	79.51
G 65.0	72.90	76.02	78.14	76.78	78.54	78.08	79.04
G 70.0	74.80	75.11	77.59	75.54	73.29	73.27	74.49
G 75.0	71.38	73.25	73.68	69.60	68.87	66.11	67.64
G 80.0	73.49	73.66	74.81	68.05	67.25	67.13	66.03
G 85.0	72.33	70.01	74.53	68.09	64.09	65.07	59.77
G 90.0	75.35	73.28	76.16	70.07	65.59	65.69	61.76
G 95.0	80.93	77.54	78.36	74.82	70.23	68.21	64.55
G100.0	81.55	78.36	81.48	75.01	69.43	69.85	71.49
G105.0	81.29	78.51	86.84	79.31	71.68	70.83	75.10
G110.0	82.96	82.77	85.48	78.90	72.58	72.96	76.84
G115.0	76.42	76.95	81.19	73.69	70.13	67.67	72.36
G120.0	70.13	72.06	78.43	67.69	68.54	67.36	72.81
G125.0	64.53	67.68	63.83	57.73	50.15	53.63	49.21
G130.0	17.87	17.37	22.91	17.69	26.31	20.81	25.19
G135.0	5.45	5.51	5.82	5.91	6.26	6.43	7.19
G140.0	3.55	3.69	3.78	3.86	4.03	3.87	4.09
G145.0	2.26	2.38	2.45	2.46	2.56	2.53	2.68
G150.0	1.73	1.78	1.83	1.83	1.90	1.86	1.93
G155.0	1.34	1.38	1.40	1.42	1.45	1.48	1.48
G160.0	1.10	1.14	1.13	1.15	1.17	1.14	1.19
G165.0	1.09	1.10	1.11	1.10	1.13	1.09	1.11
G170.0	1.09	1.11	1.13	1.12	1.13	1.11	1.13
G175.0	1.11	1.13	1.15	1.14	1.16	1.12	1.13
G180.0	1.13	1.13	1.13	1.13	1.13	1.13	1.13

PX-0240

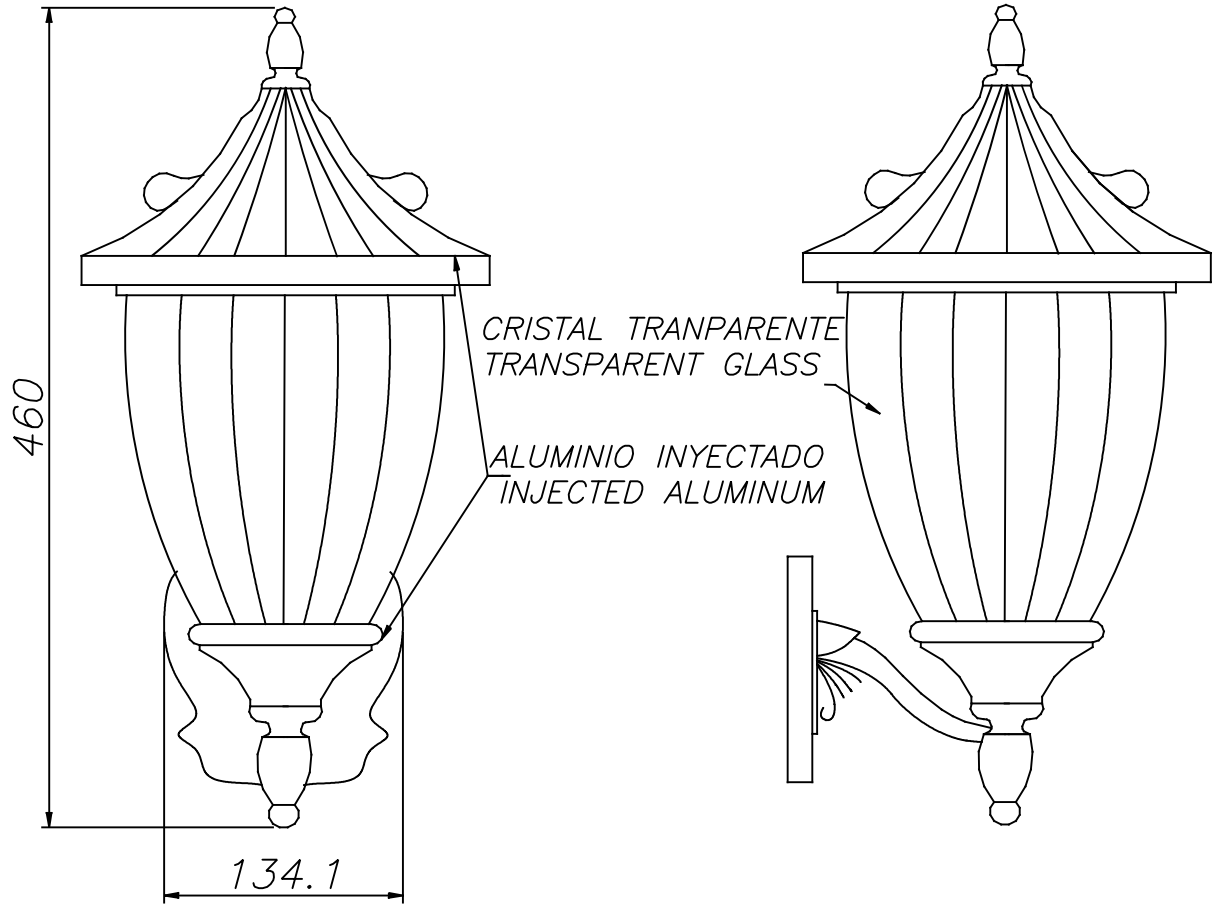

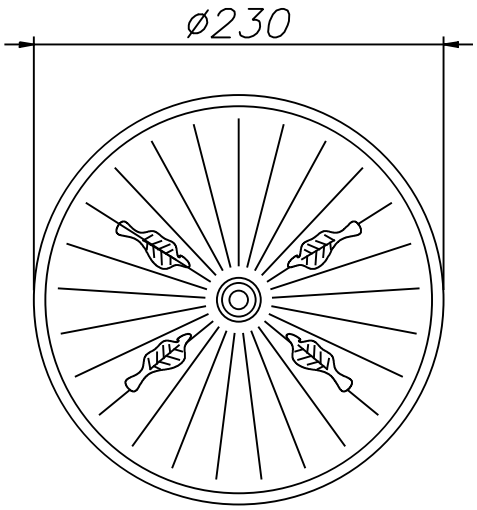

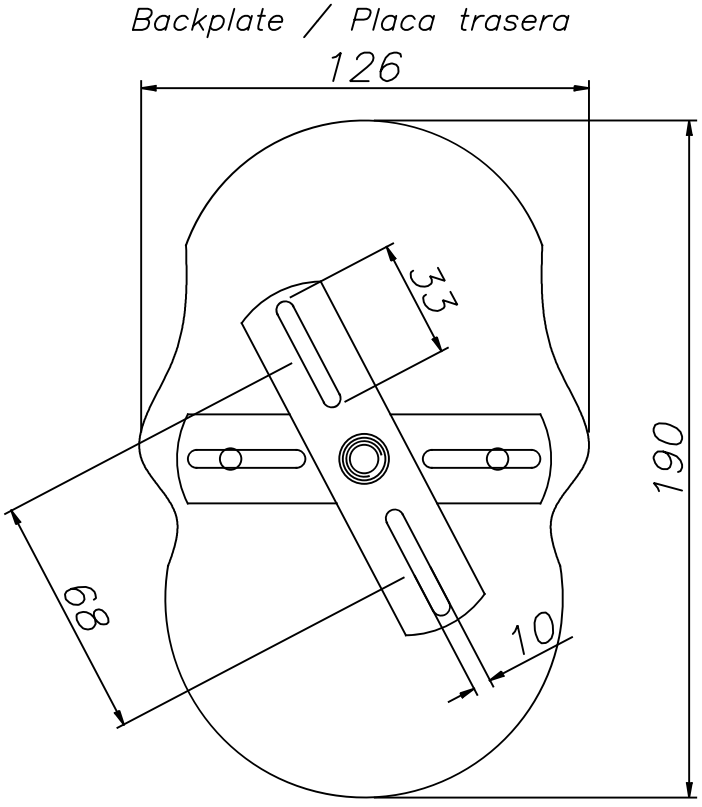

29-06-16

Adur

PX-0240

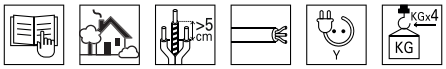

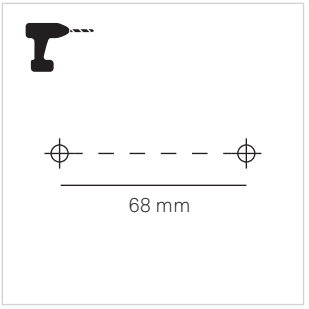

1

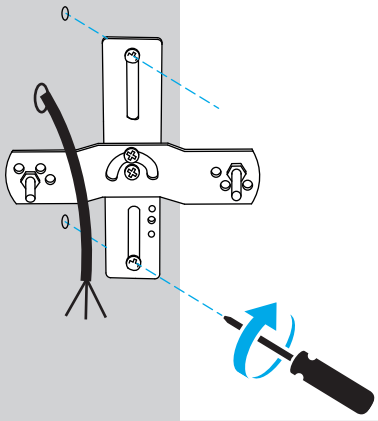

2

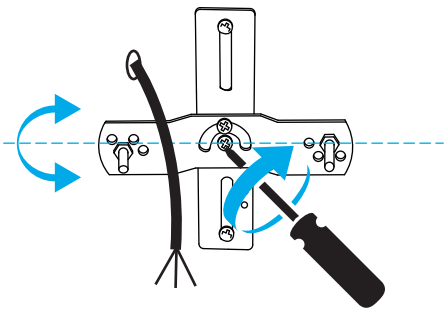

3

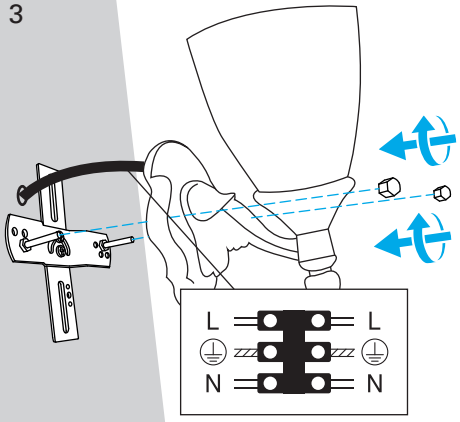

4

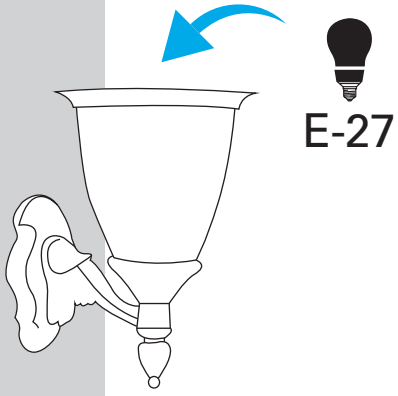

5

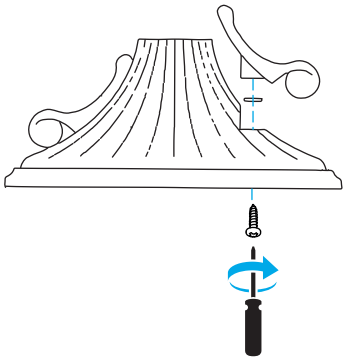

6

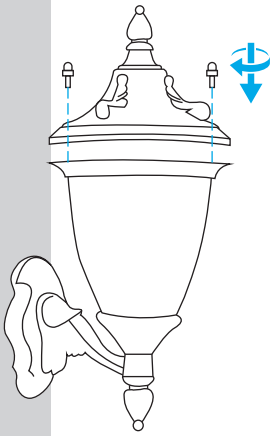

7

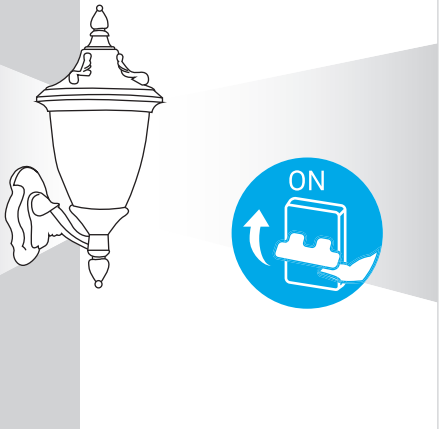

03-11-2021