Instrucciones de montaje
Datos Fotométricos

Lungo 600mm

DE-0429-CRO

Aplique Lungo 600mm LED 13.3W 3000K ON-OFF Cromo 1365.00



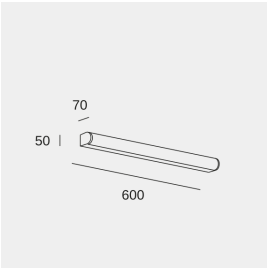

CARACTERÍSTICAS TÉCNICAS

IP44 IK10

Potencia total luminaria : 13.3W

Lúmenes reales : 1085

Lúmenes nominales : 1365

Lm / W reales : 82

Material de la estructura : Acero

Acabado estructura : Cromo

Material del difusor : Policarbonato

Acabado difusor : Opal

Voltaje / Frecuencia : 100-240V ~ 50/60Hz

Protocolo de regulación : ON-OFF

Power Factor : 0.40

Vida útil : 36.000h L70B30

Garantía : 5 Años

Luminaria fácilmente reciclable

CARACTERÍSTICAS LUMINOTÉCNICAS

CRI: 80

MacAdam steps: 5

Riesgo fotobiológico: RG0

Portalámparas	Cantidad	Potencia fuente de luz (W)	Temperatura de color correlacionada (CCT)
LED	1	11.5W	3000K

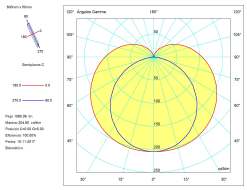

LOGÍSTICA

Peso neto (Kg): 0.97

Peso embalado (Kg): 1.19

Embalaje: 645mm x 85mm x 105mm

12 Un

APLICACIÓN DE LA LUMINARIA



La imagen puede no coincidir con la referencia, LEDS C4 se reserva el derecho de modificación de alguno de los componentes que componen el producto. Los datos relativos al flujo, la potencia y la Temperatura de Color están sujetos a una tolerancia de +- 10%.

Luminaire
Code DE-0429-CRO
Name APLIQUE LEDS 60 cm
Measurem.
Code CL116A17F354G
Name APLIQUE LEDS 60 cm

Luminaire Flux	1085.06 lm	Luminaire Power	13.26 W	Efficacy	81.83 lm/W	Efficiency	100.00%
Lamps Flux	1085.06 lm	Maximum value	204.80 cd/klm	Position	C=0.00 G=5.00	CG	Double Symmetrical

Rectangular Luminaire	Length	600 mm	Width	50 mm	Height	70 mm
Rectangular Luminous Area	Length	585 mm	Width	50 mm	Height	34 mm
Horizontal Luminous Area	0.029250 m2		Emitting area on Plane 180°		0.020475 m2	
Emitting area on Plane 0°	0.020475 m2		Emitting area on Plane 270°		0.001750 m2	
Emitting area on Plane 90°	0.001750 m2		Glare area at 76°		0.026943 m2	

Coordinate system	CG	Symmetry Type	Double Symmetrical
Date	10-11-2017	Maximum Gamma Angle	180
Measurement Distance	0.00	Measurement Flux	1085.06 lm

Operator	Asselum T2	Source Voltage [V]	
Temperature	25.00 °C	Source current [A]	
Humidity	60.00 %	Photocell	
Notes			

Luminaire Lamps

Line	Code	Name	Flux [lm]	Pow. [W]	Q.ty
	DE-0429-CRO	DE-0429-CRO	1085.06	13.26	1

C.I.E.	36 64 85 81 100	D DIN 5040	B21
F UTE	0.81 H + 0.19 T	B NBN	BZ 6

600mm x 50mm

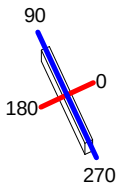

C Halfplanes
180.0 — 0.0
270.0 — 90.0

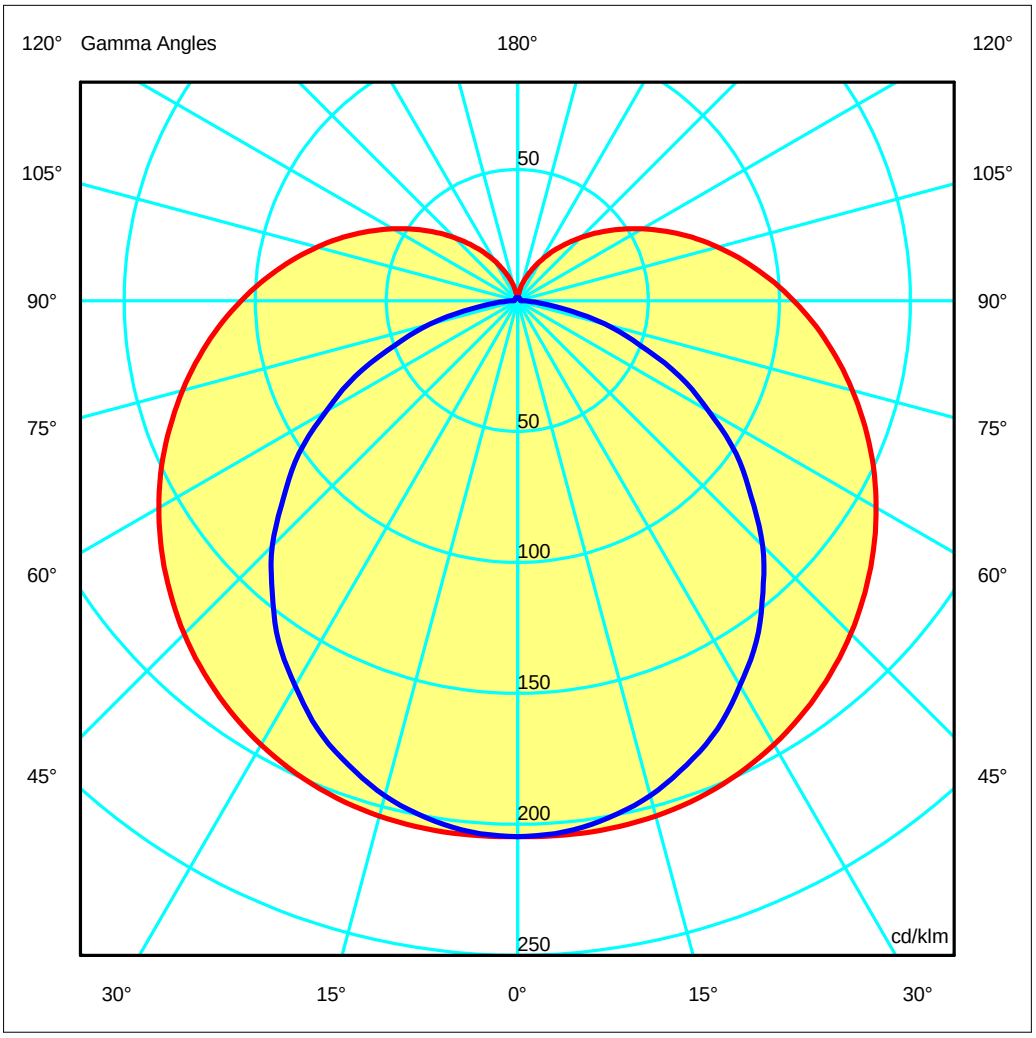

ULOR 19.25 %
DLOR 80.75 %
RN 19.25 %

Luminaire
Code DE-0429-CRO
Name APLIQUE LEDS 60 cm
Measurem.
Code CL116A17F354G
Name APLIQUE LEDS 60 cm

Luminaire Flux	1085.06 lm	Luminaire Power	13.26 W	Efficacy	81.83 lm/W	Efficiency	100.00%
Lamps Flux	1085.06 lm	Maximum value	204.80 cd/klm	Position	C=0.00 G=5.00	CG	Double Symmetrical

Luminous Intensity Table cd/klm **Table 1/1**

	C 0.00	C 15.00	C 30.00	C 45.00	C 60.00	C 75.00	C 90.00
G 0.0	204.67	204.67	204.67	204.67	204.67	204.67	204.67
G 5.0	204.80	204.73	204.56	204.27	203.96	203.73	203.64
G 10.0	204.64	204.31	203.67	202.83	201.77	200.93	200.46
G 15.0	203.73	203.17	201.96	200.10	198.06	196.44	195.66
G 20.0	202.00	201.20	198.99	196.13	192.75	190.14	188.63
G 25.0	199.31	198.19	195.20	190.99	186.13	182.25	180.49
G 30.0	195.75	194.32	190.05	184.67	178.13	172.83	169.74
G 35.0	191.24	189.48	184.46	177.23	168.88	162.16	158.92
G 40.0	185.89	183.82	177.30	168.84	158.73	150.26	145.62
G 45.0	179.90	177.36	170.18	159.75	147.72	137.31	132.31
G 50.0	173.08	170.22	161.66	149.91	135.89	123.47	116.37
G 55.0	165.87	162.67	153.47	139.76	123.60	109.00	101.81
G 60.0	158.02	154.57	144.06	129.23	111.27	94.09	84.21
G 65.0	149.87	146.10	135.26	118.81	98.52	78.97	68.33
G 70.0	141.12	137.23	125.42	108.38	86.47	63.87	49.80
G 75.0	132.32	128.33	116.42	98.08	74.48	49.76	34.41
G 80.0	123.37	119.29	106.71	88.10	63.90	36.88	17.74
G 85.0	114.46	110.24	97.93	78.92	54.09	26.28	6.80
G 90.0	105.38	101.31	88.78	70.31	45.80	18.79	1.32
G 95.0	96.49	92.55	80.63	62.25	38.64	13.94	1.13
G100.0	87.66	83.85	72.23	54.64	32.92	10.93	1.09
G105.0	79.06	75.51	64.70	48.24	27.87	9.01	1.09
G110.0	70.77	67.34	57.10	42.04	23.96	7.73	1.09
G115.0	62.62	59.55	50.35	36.56	20.47	6.74	1.09
G120.0	54.83	52.01	43.60	31.44	17.68	5.97	1.09
G125.0	47.40	44.98	37.75	27.10	15.12	5.27	1.09
G130.0	40.47	38.33	31.91	22.80	12.94	4.64	1.09
G135.0	34.00	32.19	26.93	19.33	10.92	4.03	1.11
G140.0	27.97	26.49	22.10	15.75	9.18	3.46	1.13
G145.0	22.53	21.18	17.89	12.95	7.49	2.86	1.13
G150.0	17.57	16.61	13.89	10.07	6.05	2.30	1.15
G155.0	13.15	12.38	10.57	7.69	4.43	1.79	1.17
G160.0	9.17	8.83	7.36	5.12	3.10	1.39	1.19
G165.0	5.95	5.27	4.46	3.23	1.87	1.24	1.21
G170.0	2.75	2.77	2.12	1.56	1.30	1.20	1.21
G175.0	0.89	1.08	1.00	1.09	1.14	1.20	1.22
G180.0	1.07	1.07	1.07	1.07	1.07	1.07	1.07

Luminaire
Code DE-0429-CRO
Name APLIQUE LEDS 60 cm
Measurem.
Code CL116A17F354G
Name APLIQUE LEDS 60 cm

Luminaire Flux	1085.06 lm	Luminaire Power	13.26 W	Efficacy	81.83 lm/W	Efficiency	100.00%
Lamps Flux	1085.06 lm	Maximum value	204.80 cd/klm	Position	C=0.00 G=5.00	CG	Double Symmetrical

600mm x 50mm

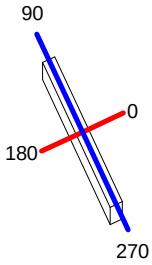

C Halfplanes



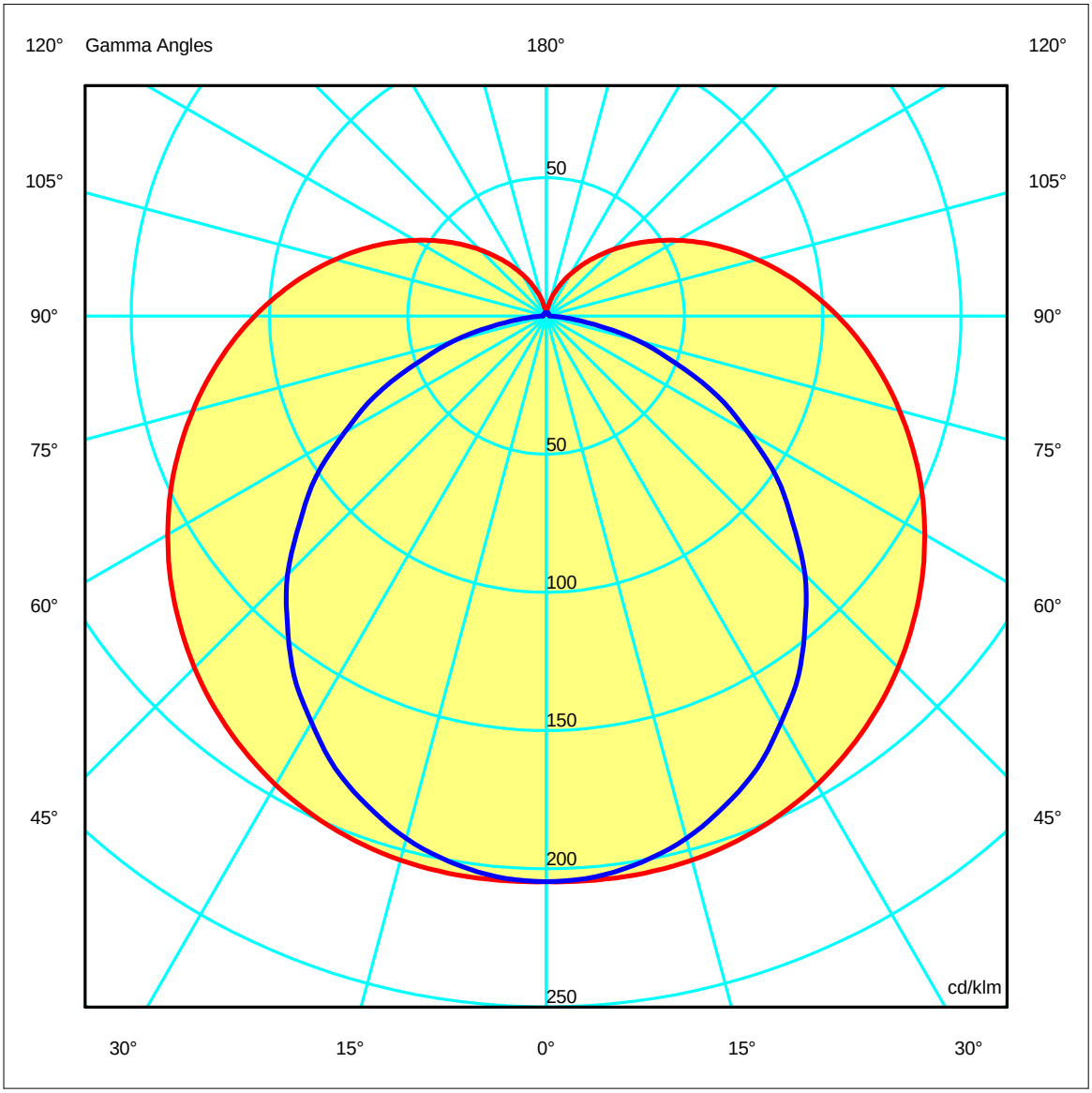

Luminaire
Code DE-0429-CRO
Name APLIQUE LEDS 60 cm
Measurem.
Code CL116A17F354G
Name APLIQUE LEDS 60 cm

Luminaire Flux	1085.06 lm	Luminaire Power	13.26 W	Efficacy	81.83 lm/W	Efficiency	100.00%
Lamps Flux	1085.06 lm	Maximum value	204.80 cd/klm	Position	C=0.00 G=5.00	CG	Double Symmetrical

Right beam angle not found, gamma = 6

Right beam angle not found, gamma = 6

Right beam angle not found, gamma = 6

Luminaire
Code DE-0429-CRO
Name APLIQUE LEDS 60 cm
Measurem.
Code CL116A17F354G
Name APLIQUE LEDS 60 cm

Luminaire Flux	1085.06 lm	Luminaire Power	13.26 W	Efficacy	81.83 lm/W	Efficiency	100.00%
Lamps Flux	1085.06 lm	Maximum value	204.80 cd/klm	Position	C=0.00 G=5.00	CG	Double Symmetrical

UGR
S = 0.250

Reflectancies										
Ceiling/Cavity	0.7	0.7	0.5	0.5	0.3	0.7	0.7	0.5	0.5	0.3
Walls	0.5	0.3	0.5	0.3	0.3	0.5	0.3	0.5	0.3	0.3
WorkingPlane	0.2	0.2	0.2	0.2	0.2	0.2	0.2	0.2	0.2	0.2
RoomDimensions	Viewed Crosswise					Viewed Endwise				
x=2H y=2H	17.5	18.7	18.1	19.3	19.9	16.2	17.4	16.7	18.0	18.6
x=2H y=3H	19.8	20.9	20.4	21.5	22.2	17.7	18.8	18.2	19.4	20.0
x=2H y=4H	21.0	22.1	21.6	22.7	23.3	18.2	19.3	18.8	19.9	20.6
x=2H y=6H	22.2	23.1	22.8	23.8	24.5	18.6	19.5	19.2	20.2	20.9
x=2H y=8H	22.7	23.7	23.4	24.3	25.0	18.7	19.6	19.3	20.2	20.9
x=2H y=12H	23.3	24.2	23.9	24.8	25.6	18.7	19.6	19.3	20.2	21.0
x=4H y=2H	18.2	19.2	18.8	19.8	20.5	17.2	18.3	17.8	18.9	19.6
x=4H y=3H	20.7	21.6	21.4	22.3	23.0	18.9	19.8	19.6	20.5	21.2
x=4H y=4H	22.1	22.9	22.7	23.5	24.3	19.6	20.5	20.3	21.1	21.9
x=4H y=6H	23.4	24.1	24.1	24.8	25.6	20.2	20.9	20.9	21.6	22.4
x=4H y=8H	24.1	24.7	24.8	25.4	26.3	20.3	21.0	21.0	21.7	22.5
x=4H y=12H	24.7	25.3	25.4	26.1	26.9	20.4	21.0	21.1	21.7	22.6
x=8H y=4H	22.4	23.1	23.1	23.8	24.6	20.5	21.1	21.2	21.8	22.7
x=8H y=6H	24.0	24.6	24.7	25.3	26.1	21.3	21.9	22.0	22.6	23.4
x=8H y=8H	24.8	25.3	25.6	26.1	27.0	21.6	22.1	22.3	22.8	23.7
x=8H y=12H	25.7	26.1	26.4	26.9	27.8	21.8	22.3	22.6	23.0	23.9
x=12H y=4H	22.4	23.1	23.2	23.8	24.6	20.7	21.3	21.4	22.0	22.8
x=12H y=6H	24.1	24.6	24.9	25.4	26.2	21.6	22.2	22.4	22.9	23.8
x=12H y=8H	25.0	25.5	25.8	26.2	27.1	22.1	22.5	22.8	23.3	24.2

Luminaire
Code DE-0429-CRO
Name APLIQUE LEDS 60 cm
Measurem.
Code CL116A17F354G
Name APLIQUE LEDS 60 cm

Luminaire Flux	1085.06 lm	Luminaire Power	13.26 W	Efficacy	81.83 lm/W	Efficiency	100.00%
Lamps Flux	1085.06 lm	Maximum value	204.80 cd/klm	Position	C=0.00 G=5.00	CG	Double Symmetrical

600mm x 50mm

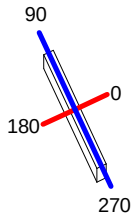

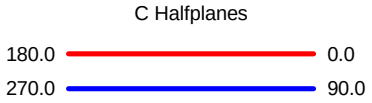

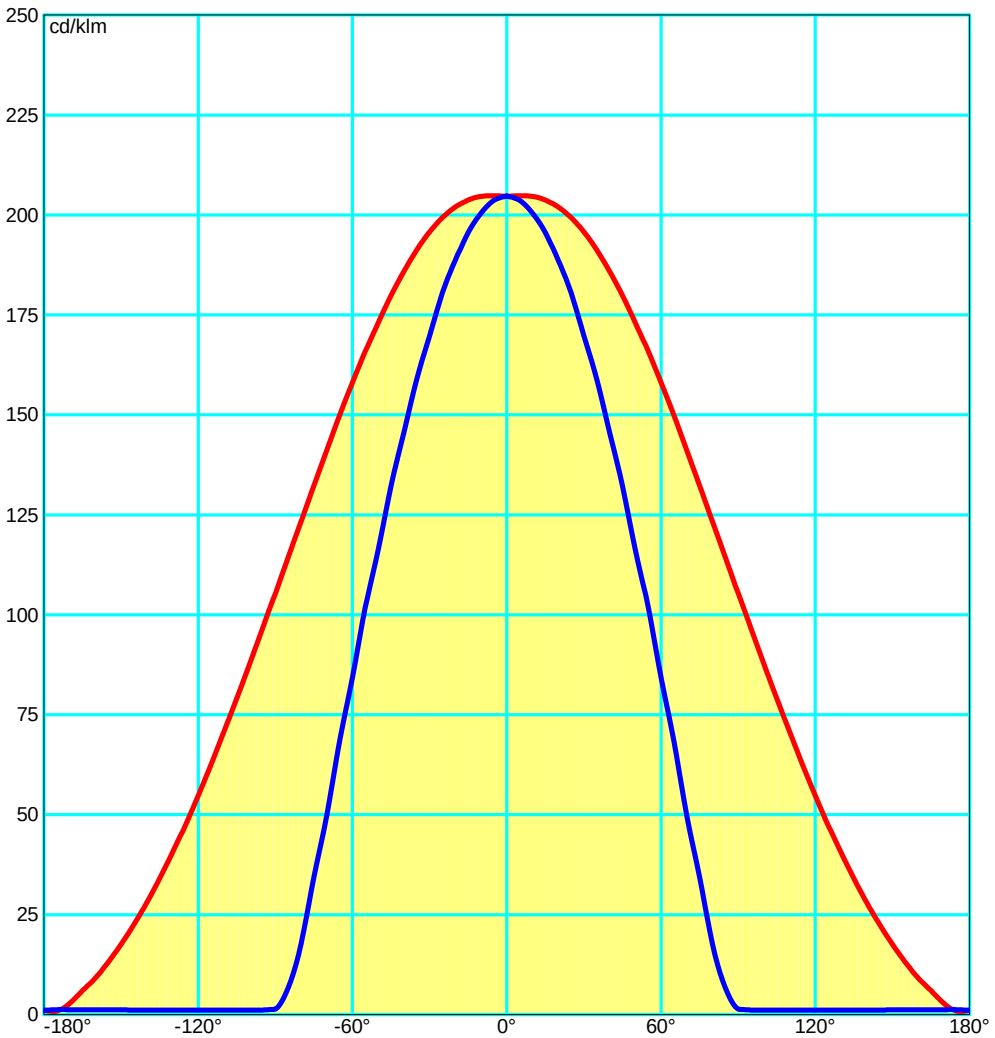

Luminaire
Code DE-0429-CRO
Name APLIQUE LEDS 60 cm
Measurem.
Code CL116A17F354G
Name APLIQUE LEDS 60 cm

Luminaire Flux	1085.06 lm	Luminaire Power	13.26 W	Efficacy	81.83 lm/W	Efficiency	100.00%
Lamps Flux	1085.06 lm	Maximum value	204.80 cd/klm	Position	C=0.00 G=5.00	CG	Double Symmetrical

Luminance

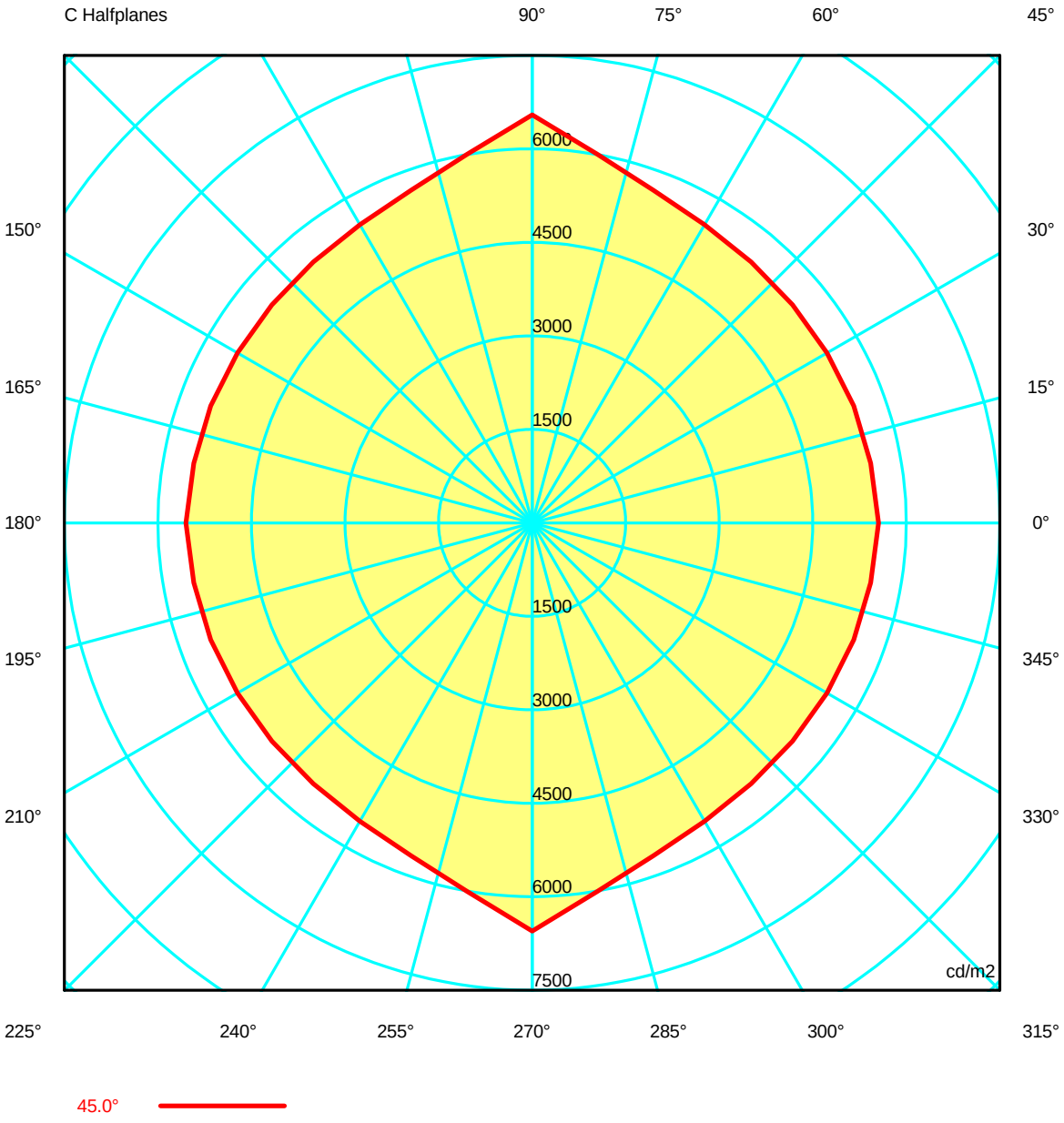

Luminaire
Code DE-0429-CRO
Name APLIQUE LEDS 60 cm
Measurem.
Code CL116A17F354G
Name APLIQUE LEDS 60 cm

Luminaire Flux	1085.06 lm	Luminaire Power	13.26 W	Efficacy	81.83 lm/W	Efficiency	100.00%
Lamps Flux	1085.06 lm	Maximum value	204.80 cd/klm	Position	C=0.00 G=5.00	CG	Double Symmetrical

Luminance cd/m2 **Table 1/3**

	C 0.00	C 10.00	C 20.00	C 30.00	C 40.00	C 50.00	C 60.00	C 70.00	C 80.00	C 90.00	C 100.00	C 110.00	C 120.00
G 0.0	7592.46	7592.46	7592.46	7592.46	7592.46	7592.46	7592.46	7592.46	7592.46	7592.46	7592.46	7592.46	7592.46
G 5.0	7186.30	7184.88	7194.99	7215.63	7246.07	7286.49	7336.99	7397.30	7466.92	7543.55	7466.92	7397.30	7336.99
G 10.0	6861.41	6855.29	6867.80	6898.07	6947.69	7014.01	7097.49	7202.21	7328.49	7472.00	7328.49	7202.21	7097.49
G 15.0	6588.29	6578.20	6592.30	6626.60	6681.46	6760.20	6866.97	7006.35	7183.99	7395.62	7183.99	7006.35	6866.97
G 20.0	6355.16	6342.86	6351.25	6378.62	6436.64	6521.62	6638.40	6803.10	7021.67	7287.74	7021.67	6803.10	6638.40
G 25.0	6150.52	6132.66	6138.25	6162.00	6214.07	6296.02	6416.29	6594.29	6851.75	7187.01	6851.75	6594.29	6416.29
G 30.0	5971.42	5951.09	5945.78	5953.89	6001.49	6078.90	6193.30	6378.91	6657.80	7028.08	6657.80	6378.91	6193.30
G 35.0	5811.93	5785.08	5777.50	5779.30	5807.03	5864.77	5968.49	6153.96	6464.38	6907.43	6464.38	6153.96	5968.49
G 40.0	5671.03	5641.86	5619.12	5597.68	5614.91	5661.72	5748.32	5923.33	6240.55	6714.68	6240.55	5923.33	5748.32
G 45.0	5551.54	5512.19	5486.00	5456.81	5446.55	5464.75	5528.39	5678.96	6006.73	6549.45	6006.73	5678.96	5528.39
G 50.0	5445.76	5402.25	5360.40	5306.59	5279.08	5273.65	5302.93	5422.94	5729.57	6269.11	5729.57	5422.94	5302.93
G 55.0	5364.56	5312.56	5266.33	5200.85	5139.89	5093.92	5079.34	5146.69	5446.77	6066.32	5446.77	5146.69	5079.34
G 60.0	5299.06	5243.36	5179.67	5085.32	5003.16	4930.00	4867.75	4865.56	5093.07	5660.79	5093.07	4865.56	4867.75
G 65.0	5259.72	5192.82	5125.05	5021.84	4907.14	4780.68	4645.15	4550.46	4719.86	5315.46	4719.86	4550.46	4645.15
G 70.0	5235.83	5165.94	5081.23	4950.55	4819.35	4663.95	4457.43	4232.11	4230.25	4638.44	4230.25	4232.11	4457.43
G 75.0	5250.17	5171.44	5085.23	4945.57	4776.97	4563.62	4270.96	3902.64	3743.60	4032.11	3743.60	3902.64	4270.96
G 80.0	5303.02	5218.13	5115.06	4947.56	4759.21	4522.13	4163.58	3620.63	3132.57	2830.09	3132.57	3620.63	4163.58
G 85.0	5412.55	5312.24	5207.86	5039.48	4830.24	4552.83	4116.83	3402.64	2628.71	1719.19	2628.71	3402.64	4116.83
G 90.0	5584.61	5480.61	5363.65	5177.27	4975.75	4701.76	4227.98	3402.54	2464.70	818.40	2464.70	3402.54	4227.98

Luminaire
Code DE-0429-CRO
Name APLIQUE LEDS 60 cm
Measurem.
Code CL116A17F354G
Name APLIQUE LEDS 60 cm

Luminaire Flux	1085.06 lm	Luminaire Power	13.26 W	Efficacy	81.83 lm/W	Efficiency	100.00%
Lamps Flux	1085.06 lm	Maximum value	204.80 cd/klm	Position	C=0.00 G=5.00	CG	Double Symmetrical

Luminance cd/m2 **Table 2/3**

	C 130.00	C 140.00	C 150.00	C 160.00	C 170.00	C 180.00	C 190.00	C 200.00	C 210.00	C 220.00	C 230.00	C 240.00	C 250.00
G 0.0	7592.46	7592.46	7592.46	7592.46	7592.46	7592.46	7592.46	7592.46	7592.46	7592.46	7592.46	7592.46	7592.46
G 5.0	7286.49	7246.07	7215.63	7194.99	7184.88	7186.30	7184.88	7194.99	7215.63	7246.07	7286.49	7336.99	7397.30
G 10.0	7014.01	6947.69	6898.07	6867.80	6855.29	6861.41	6855.29	6867.80	6898.07	6947.69	7014.01	7097.49	7202.21
G 15.0	6760.20	6681.46	6626.60	6592.30	6578.20	6588.29	6578.20	6592.30	6626.60	6681.46	6760.20	6866.97	7006.35
G 20.0	6521.62	6436.64	6378.62	6351.25	6342.86	6355.16	6342.86	6351.25	6378.62	6436.64	6521.62	6638.40	6803.10
G 25.0	6296.02	6214.07	6162.00	6138.25	6132.66	6150.52	6132.66	6138.25	6162.00	6214.07	6296.02	6416.29	6594.29
G 30.0	6078.90	6001.49	5953.89	5945.78	5951.09	5971.42	5951.09	5945.78	5953.89	6001.49	6078.90	6193.30	6378.91
G 35.0	5864.77	5807.03	5779.30	5777.50	5785.08	5811.93	5785.08	5777.50	5779.30	5807.03	5864.77	5968.49	6153.96
G 40.0	5661.72	5614.91	5597.68	5619.12	5641.86	5671.03	5641.86	5619.12	5597.68	5614.91	5661.72	5748.32	5923.33
G 45.0	5464.75	5446.55	5456.81	5486.00	5512.19	5551.54	5512.19	5486.00	5456.81	5446.55	5464.75	5528.39	5678.96
G 50.0	5273.65	5279.08	5306.59	5360.40	5402.25	5445.76	5402.25	5360.40	5306.59	5279.08	5273.65	5302.93	5422.94
G 55.0	5093.92	5139.89	5200.85	5266.33	5312.56	5364.56	5312.56	5266.33	5200.85	5139.89	5093.92	5079.34	5146.69
G 60.0	4930.00	5003.16	5085.32	5179.67	5243.36	5299.06	5243.36	5179.67	5085.32	5003.16	4930.00	4867.75	4865.56
G 65.0	4780.68	4907.14	5021.84	5125.05	5192.82	5259.72	5192.82	5125.05	5021.84	4907.14	4780.68	4645.15	4550.46
G 70.0	4663.95	4819.35	4950.55	5081.23	5165.94	5235.83	5165.94	5081.23	4950.55	4819.35	4663.95	4457.43	4232.11
G 75.0	4563.62	4776.97	4945.57	5085.23	5171.44	5250.17	5171.44	5085.23	4945.57	4776.97	4563.62	4270.96	3902.64
G 80.0	4522.13	4759.21	4947.56	5115.06	5218.13	5303.02	5218.13	5115.06	4947.56	4759.21	4522.13	4163.58	3620.63
G 85.0	4552.83	4830.24	5039.48	5207.86	5312.24	5412.55	5312.24	5207.86	5039.48	4830.24	4552.83	4116.83	3402.64
G 90.0	4701.76	4975.75	5177.27	5363.65	5480.61	5584.61	5480.61	5363.65	5177.27	4975.75	4701.76	4227.98	3402.54

Luminaire
Code DE-0429-CRO
Name APLIQUE LEDS 60 cm
Measurem.
Code CL116A17F354G
Name APLIQUE LEDS 60 cm

Luminaire Flux	1085.06 lm	Luminaire Power	13.26 W	Efficacy	81.83 lm/W	Efficiency 100.00%
Lamps Flux	1085.06 lm	Maximum value	204.80 cd/klm	Position	C=0.00 G=5.00	CG Double Symmetrical

Luminance cd/m2 **Table 3/3**

	C 260.00	C 270.00	C 280.00	C 290.00	C 300.00	C 310.00	C 320.00	C 330.00	C 340.00	C 350.00
G 0.0	7592.46	7592.46	7592.46	7592.46	7592.46	7592.46	7592.46	7592.46	7592.46	7592.46
G 5.0	7466.92	7543.55	7466.92	7397.30	7336.99	7286.49	7246.07	7215.63	7194.99	7184.88
G 10.0	7328.49	7472.00	7328.49	7202.21	7097.49	7014.01	6947.69	6898.07	6867.80	6855.29
G 15.0	7183.99	7395.62	7183.99	7006.35	6866.97	6760.20	6681.46	6626.60	6592.30	6578.20
G 20.0	7021.67	7287.74	7021.67	6803.10	6638.40	6521.62	6436.64	6378.62	6351.25	6342.86
G 25.0	6851.75	7187.01	6851.75	6594.29	6416.29	6296.02	6214.07	6162.00	6138.25	6132.66
G 30.0	6657.80	7028.08	6657.80	6378.91	6193.30	6078.90	6001.49	5953.89	5945.78	5951.09
G 35.0	6464.38	6907.43	6464.38	6153.96	5968.49	5864.77	5807.03	5779.30	5777.50	5785.08
G 40.0	6240.55	6714.68	6240.55	5923.33	5748.32	5661.72	5614.91	5597.68	5619.12	5641.86
G 45.0	6006.73	6549.45	6006.73	5678.96	5528.39	5464.75	5446.55	5456.81	5486.00	5512.19
G 50.0	5729.57	6269.11	5729.57	5422.94	5302.93	5273.65	5279.08	5306.59	5360.40	5402.25
G 55.0	5446.77	6066.32	5446.77	5146.69	5079.34	5093.92	5139.89	5200.85	5266.33	5312.56
G 60.0	5093.07	5660.79	5093.07	4865.56	4867.75	4930.00	5003.16	5085.32	5179.67	5243.36
G 65.0	4719.86	5315.46	4719.86	4550.46	4645.15	4780.68	4907.14	5021.84	5125.05	5192.82
G 70.0	4230.25	4638.44	4230.25	4232.11	4457.43	4663.95	4819.35	4950.55	5081.23	5165.94
G 75.0	3743.60	4032.11	3743.60	3902.64	4270.96	4563.62	4776.97	4945.57	5085.23	5171.44
G 80.0	3132.57	2830.09	3132.57	3620.63	4163.58	4522.13	4759.21	4947.56	5115.06	5218.13
G 85.0	2628.71	1719.19	2628.71	3402.64	4116.83	4552.83	4830.24	5039.48	5207.86	5312.24
G 90.0	2464.70	818.40	2464.70	3402.54	4227.98	4701.76	4975.75	5177.27	5363.65	5480.61

Luminaire
Code DE-0429-CRO
Name APLIQUE LEDS 60 cm
Measurem.
Code CL116A17F354G
Name APLIQUE LEDS 60 cm

Luminaire Flux	1085.06 lm	Luminaire Power	13.26 W	Efficacy	81.83 lm/W	Efficiency	100.00%
Lamps Flux	1085.06 lm	Maximum value	204.80 cd/klm	Position	C=0.00 G=5.00	CG	Double Symmetrical

PERCENTAGE ISOCANDLES

Projection: Equal Area SLI 5.1 Tight Tilting Angle:0°

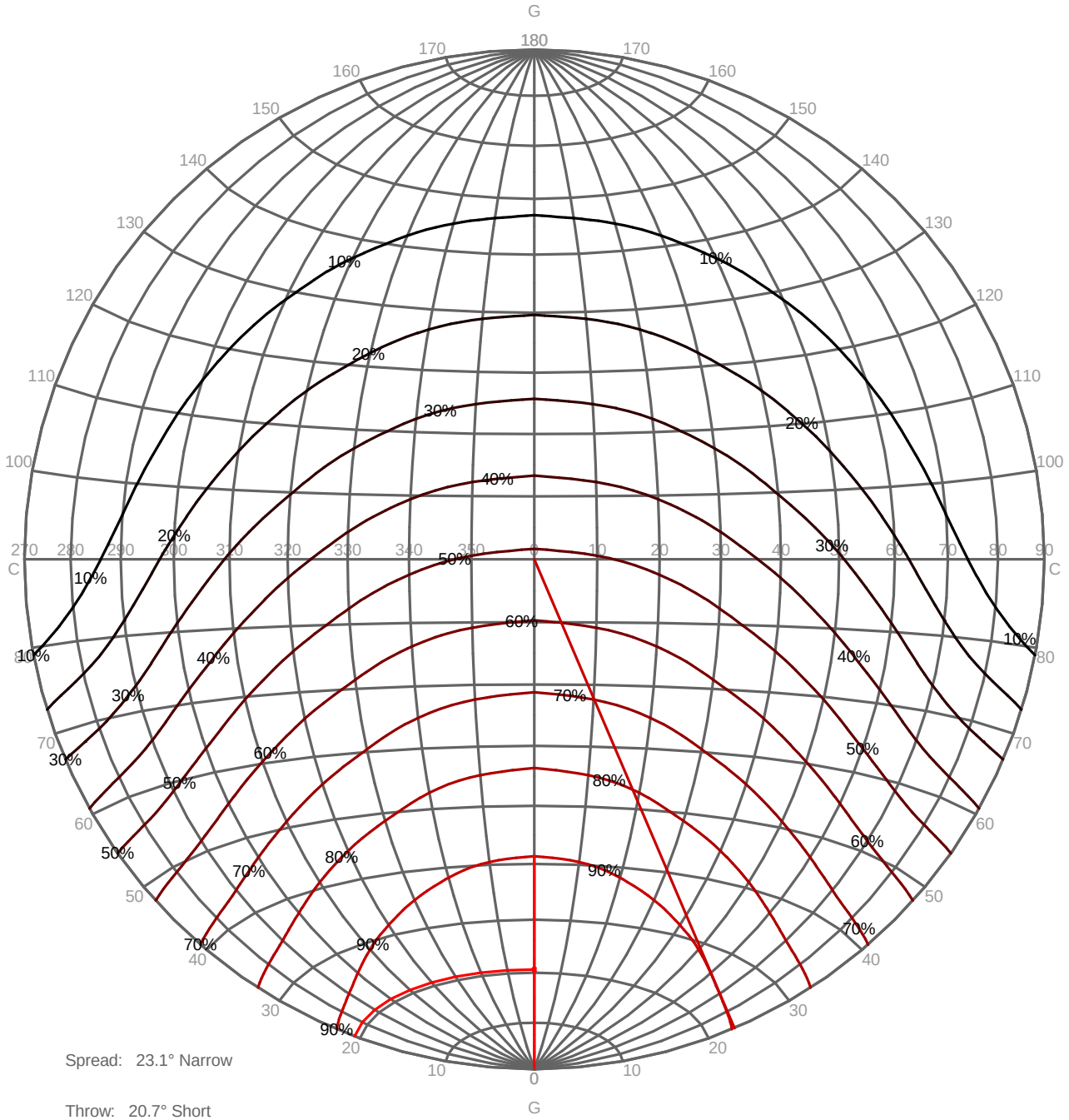

Spread: 23.1° Narrow

Throw: 20.7° Short

Luminaire
Code DE-0429-CRO
Name APLIQUE LEDS 60 cm
Measurem.
Code CL116A17F354G
Name APLIQUE LEDS 60 cm

Luminaire Flux	1085.06 lm	Luminaire Power	13.26 W	Efficacy	81.83 lm/W	Efficiency	100.00%
Lamps Flux	1085.06 lm	Maximum value	204.80 cd/klm	Position	C=0.00 G=5.00	CG	Double Symmetrical

Isolux (Floor)

Luminaire position X=0.00m Y=0.00m Z=2.50m

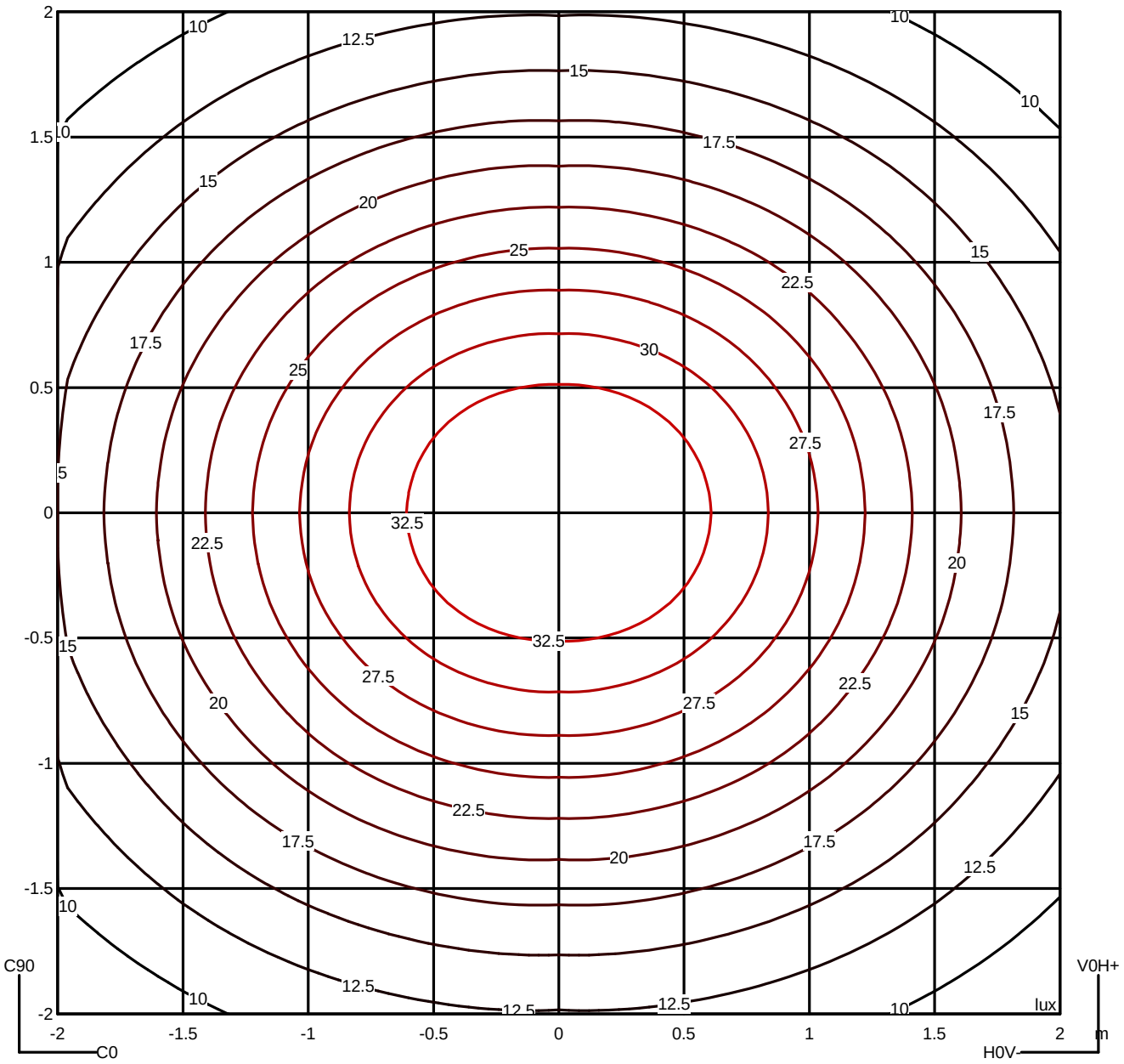

Luminaire
Code DE-0429-CRO
Name APLIQUE LEDS 60 cm
Measurem.
Code CL116A17F354G
Name APLIQUE LEDS 60 cm

Luminaire Flux	1085.06 lm	Luminaire Power	13.26 W	Efficacy	81.83 lm/W	Efficiency	100.00%
Lamps Flux	1085.06 lm	Maximum value	204.80 cd/klm	Position	C=0.00 G=5.00	CG	Double Symmetrical

Average Luminance [cd/m²]

	45°	50°	55°	60°	65°	70°	75°	80°	85°	
0.0°	5552	5446	5365	5299	5260	5236	5250	5303	5413	---
90.0°	6549	6269	6066	5661	5315	4638	4032	2830	1719	---

Flush mounted or longitudinal view

		Illumination(lx)										
A	A	2000	1000	750	500		<300					1.15
B	1		2000	1500	1000	750	500	<300				1.5
C					2000		1000	500	<300			1.85
D	2						2000	1000	500	<300		2.2
E	3							2000	1000	500	<300	2.55

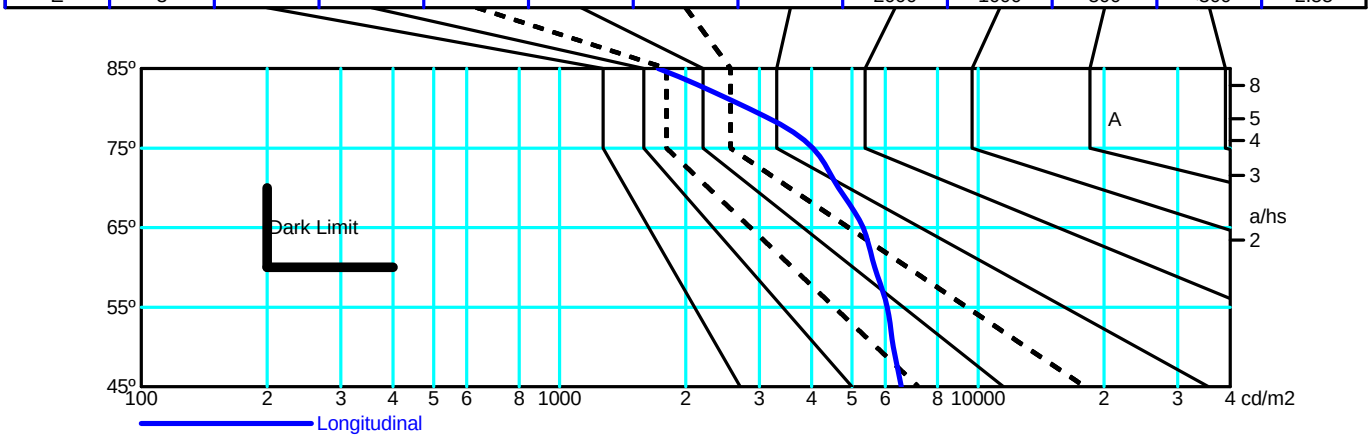

Flush mounted or transveral view

		Illumination(lx)										
A	A	2000	1000	750	500		<300					1.15
B	1		2000	1500	1000	750	500	<300				1.5
C					2000		1000	500	<300			1.85
D	2						2000	1000	500	<300		2.2
E	3							2000	1000	500	<300	2.55

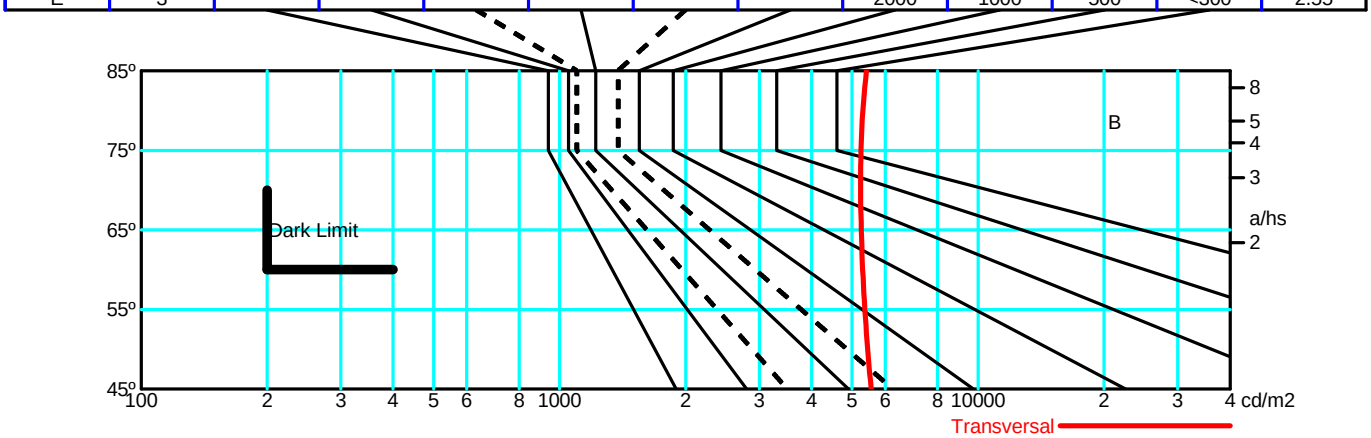

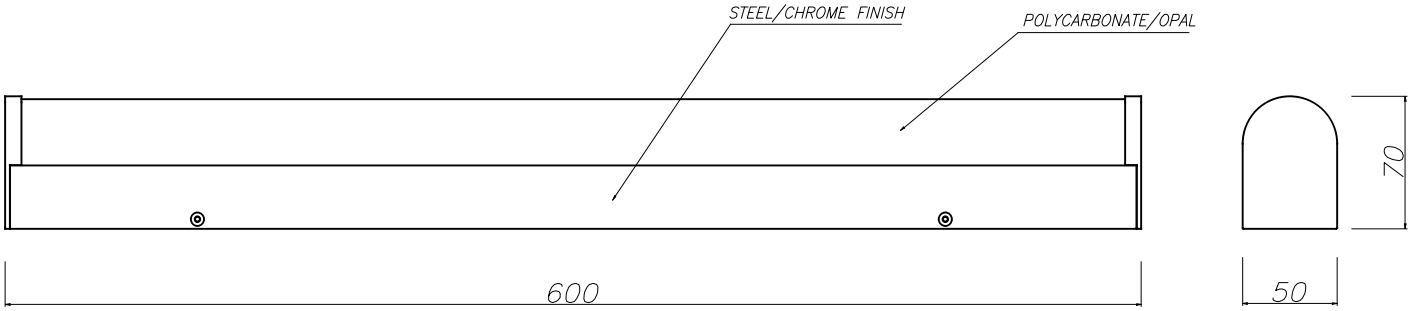

INSTALLATION TEMPLATE
PLANTILLA DE INSTALACIÓN

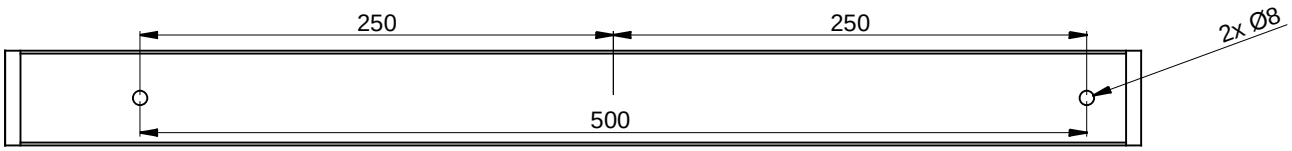

Lungo

DE-0428 DE-0429

DE-0428

200 mm

DE-0429

400 mm

1

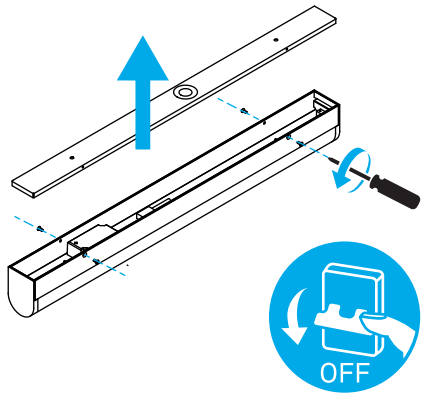

2

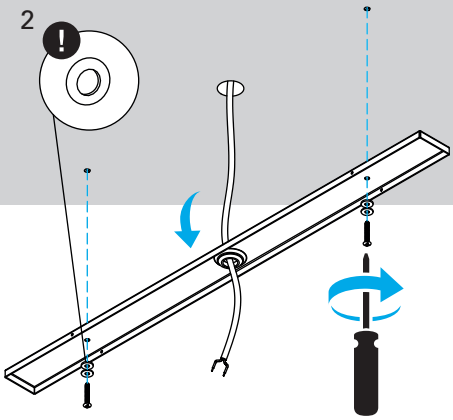

3

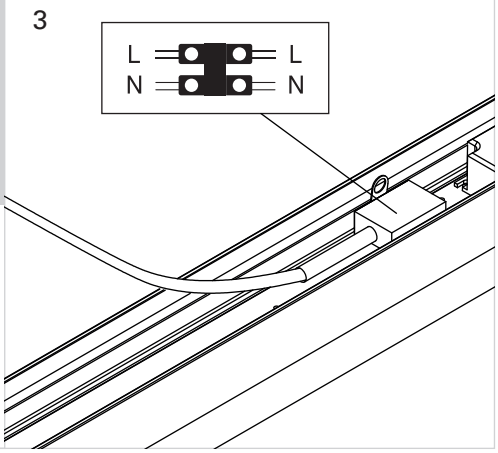

4

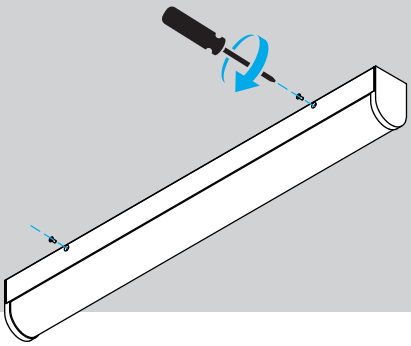

5

