Alfil

PX-0034-ANT

Surface-mounted wall light IP44 Alfil E27 15W Urban grey





TECHNICAL FEATURES

IP44 IK09

Luminaire total power : 15W

Structure material : Aluminium

Structure finish : Urban grey

Diffuser material : Glass

Diffuser finish : Matt

Max. size of light bulb : 130/45 mm

Recommended light bulb : E27

Voltage / frequency : 100-240V ~ 50/60Hz

Warranty : 2 Years

Easily recyclable luminaire

LUMINOTECHNIC FEATURES

Lampholder	Quantity	Light source power (W)	Correlated Colour Temperature (CCT)
E27	1	Max. power 15W	-

LOGISTICS

Net weight (kg): 1.08

Packaged weight (kg): 1.22

Packaging: 125mm x 80mm x 285mm

6 Un

Image may not match reference. LEDS C4 reserves the right to amend any of the product's components. The data related to flux, power and colour temperature are subject to a tolerance of ±10%.

Alfil

PX-0034

FOR LIGHT

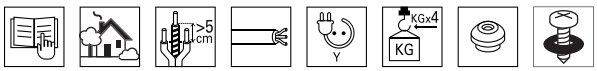



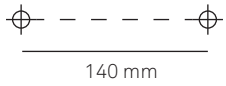

1

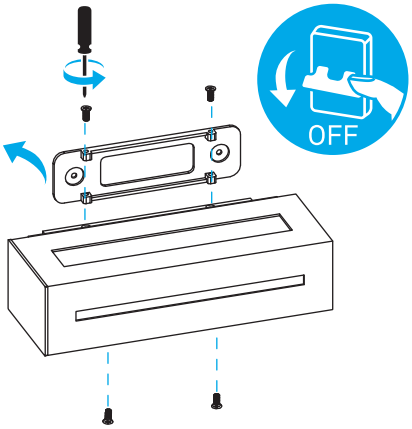

2

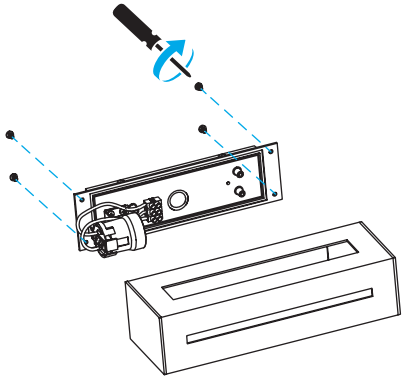

3

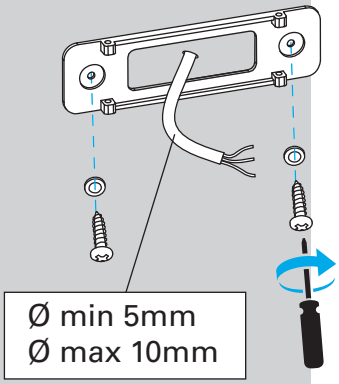

4

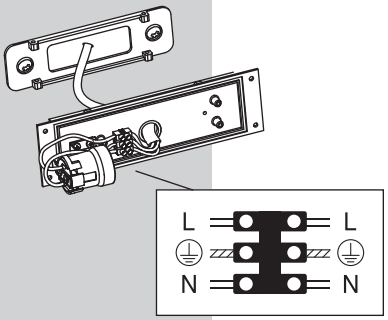

5

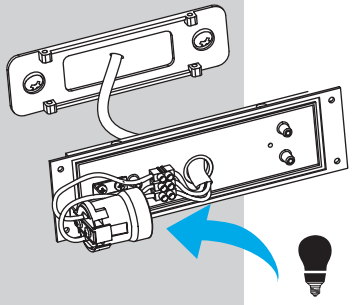

6

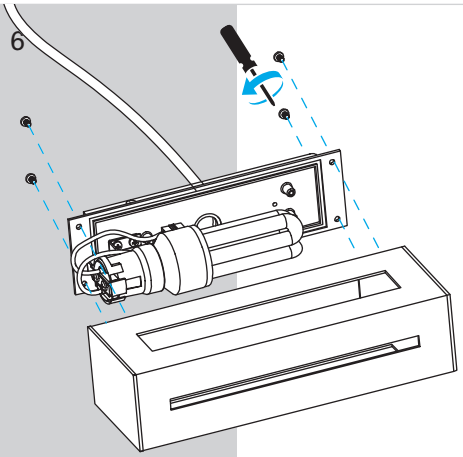

7

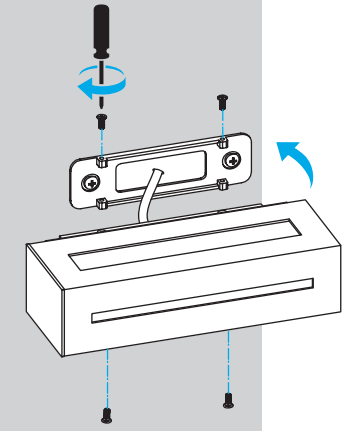

8

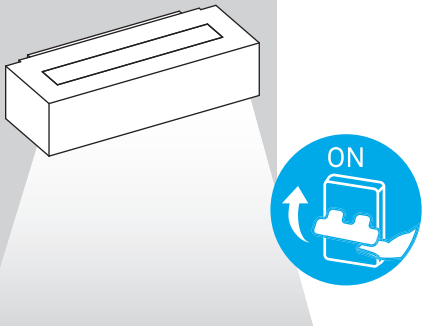

5-7-2021