Selene

PX-0464-GRI

Surface-mounted ceiling light IP54 Selene GU10 max. 8W Grey



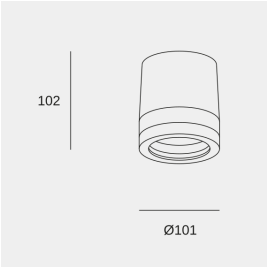

TECHNICAL FEATURES

IP54 IK09 RF 850ºC 0,5m

Luminaire total power : 8W

Structure material : Aluminium

Structure finish : Grey

Diffuser material : Glass, Methacrylate

Diffuser finish : Transparent

Max. size of light bulb : 52/50 mm

Recommended light bulb : GU10

Voltage / frequency : 100-240V ~ 50/60Hz

Warranty : 2 Years

Corrosion resistance (Neutral Salt Spray test according to ISO 9227) : No

Easily recyclable luminaire

LUMINOTECHNIC FEATURES

Lampholder	Quantity	Light source power (W)	Correlated Colour Temperature (CCT)
GU10	1	Max. power 8W	-

LOGISTICS

Net weight (kg): 0.36

Packaged weight (kg): 0.48

Packaging: 110mm x 110mm x 140mm

6 Un

Image may not match reference. LEDS C4 reserves the right to amend any of the product's components. The data related to flux, power and colour temperature are subject to a tolerance of ±10%.

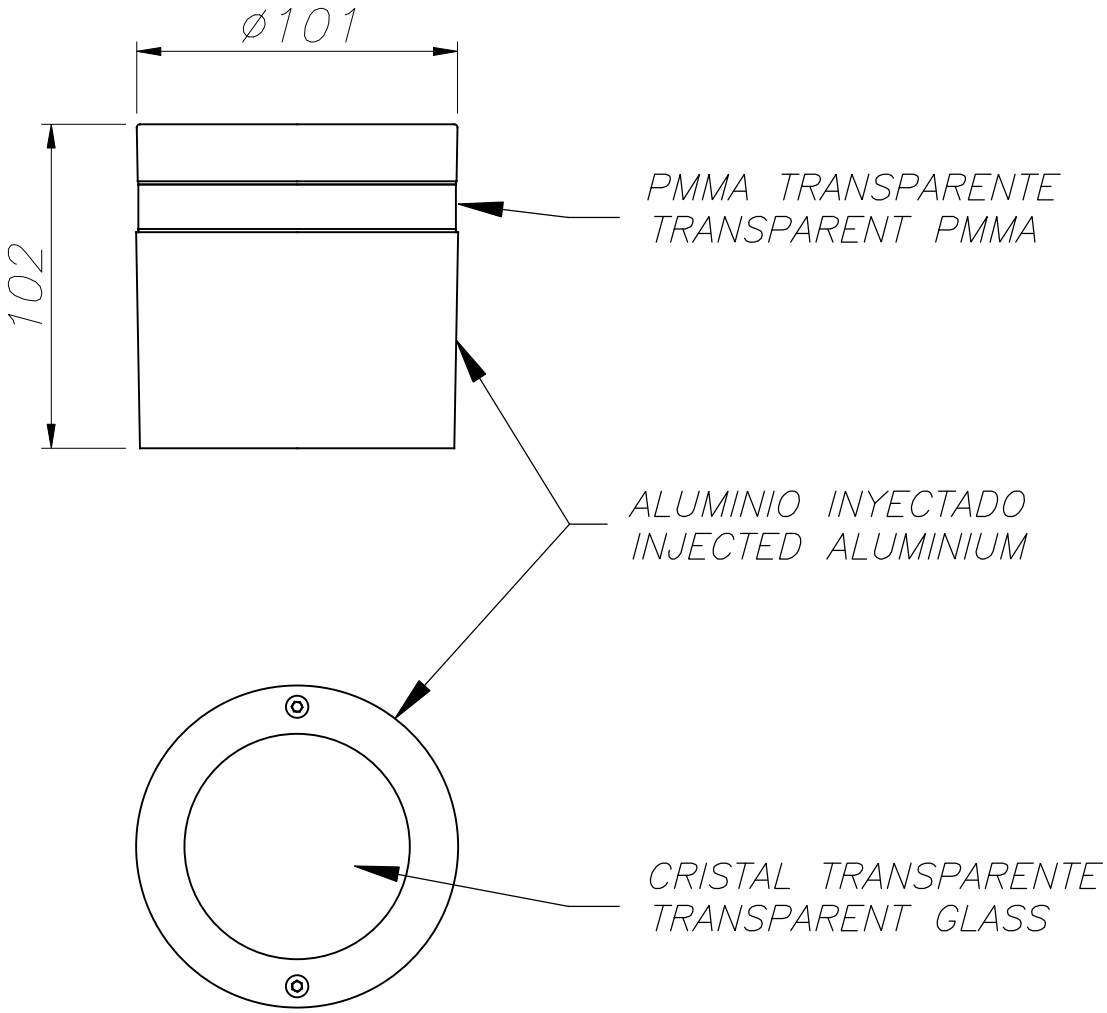

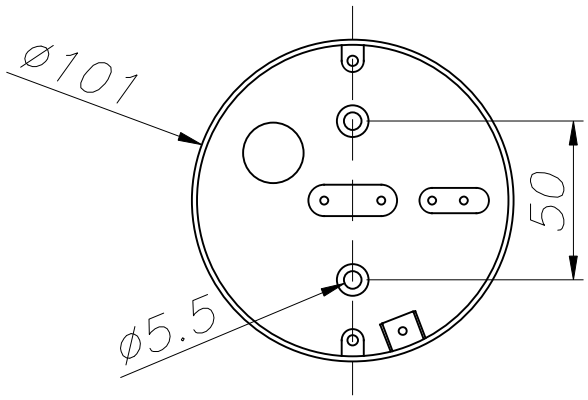

PLANTILLA DE INSTALACIóN
INSTALLATION TEMPLATE

Selene

PX-0464

50 mm

1

