Installation Instructions

Tamesis

PX-0465-INO

Recessed wall lighting IP44 Tamesis E27 15W Stainless steel



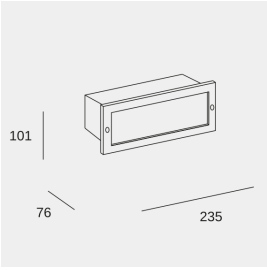

TECHNICAL FEATURES

IP44 IK08

Luminaire total power : 15W

Structure material : Stainless steel AISI304

Structure finish : Stainless steel

Diffuser material : Glass

Diffuser finish : Matt

Max. size of light bulb : 145/45 mm

Recommended light bulb : E27

Voltage / frequency : 100-240V ~ 50/60Hz

Warranty : 5 Years

Corrosion resistance (Neutral Salt Spray test according to ISO 9227) : No

Easily recyclable luminaire

LUMINOTECHNIC FEATURES

Lampholder	Quantity	Light source power (W)	Correlated Colour Temperature (CCT)
E27	1	Max. power 15W	-

LOGISTICS

Net weight (kg): 0.94

Packaged weight (kg): 1.06

Packaging: 245mm x 110mm x 110mm

18 Un

LIGHT APPLICATION



Image may not match reference. LEDS C4 reserves the right to amend any of the product's components. The data related to flux, power and colour temperature are subject to a tolerance of ±10%.

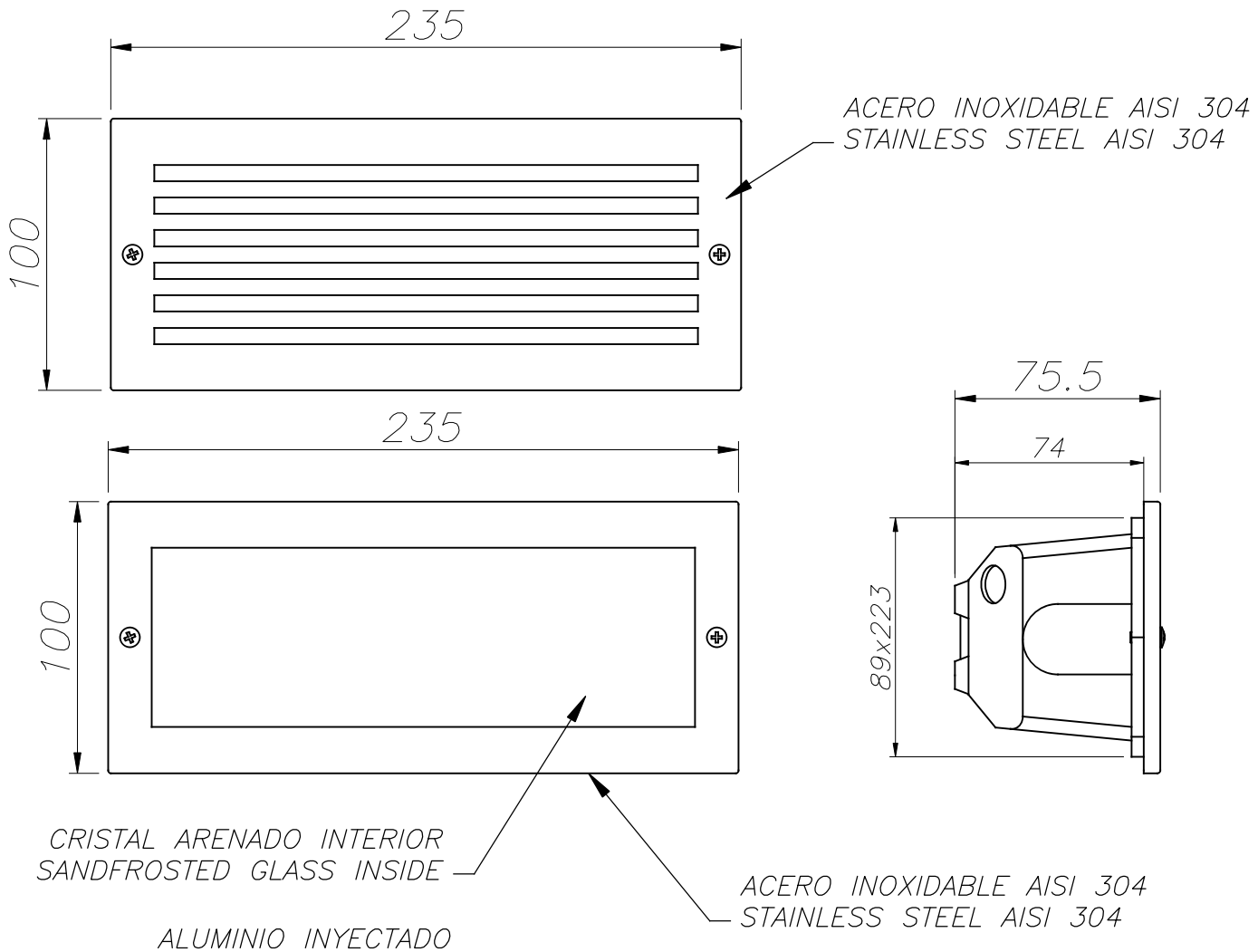

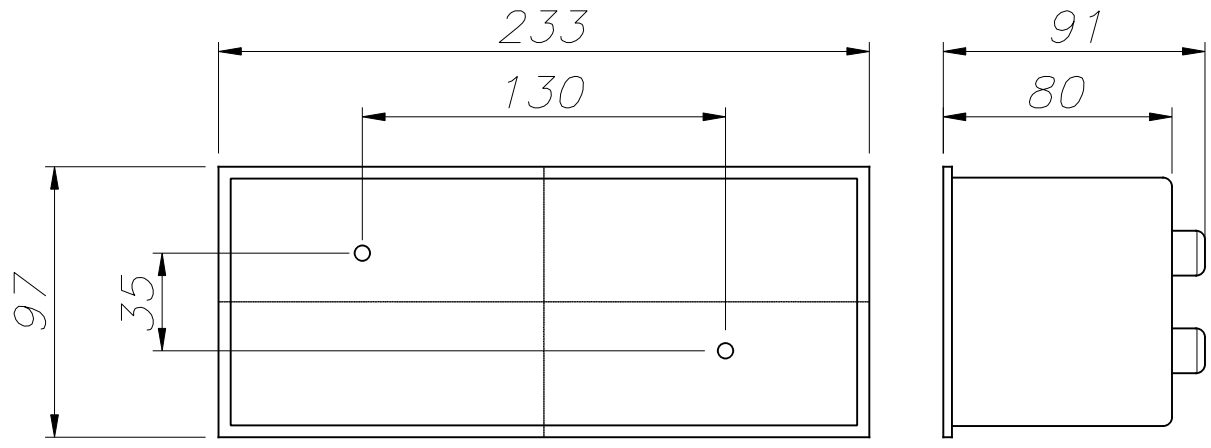

CAJA DE EMPOTRAR
FLUSH FITTING BOX

29-03-19

Tamesis

PX-0465

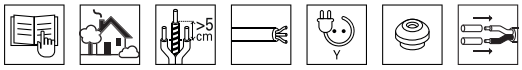

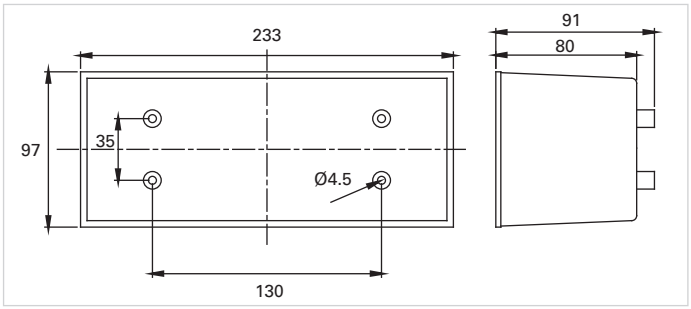

1

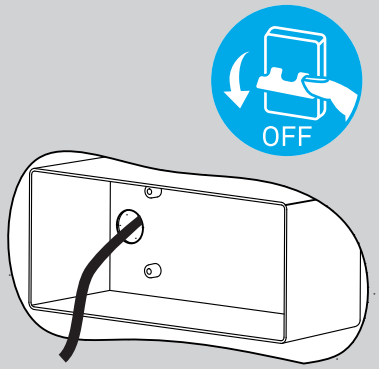

2

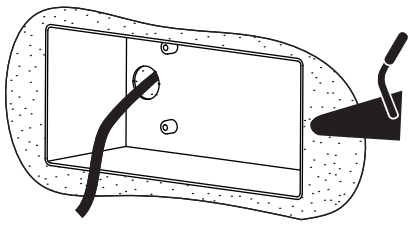

3

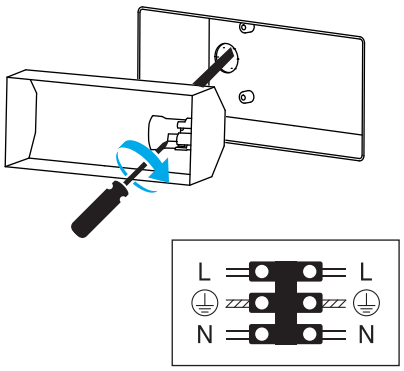

4

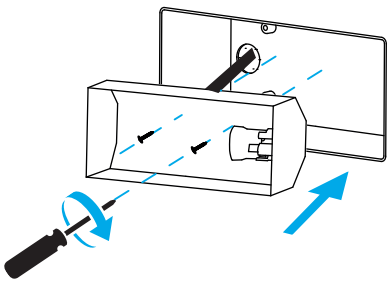

5

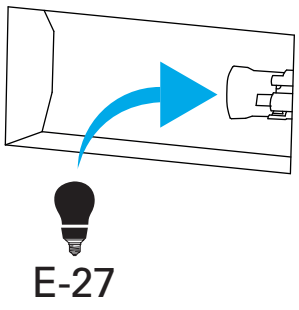

6

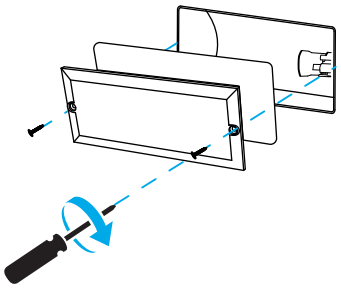

7

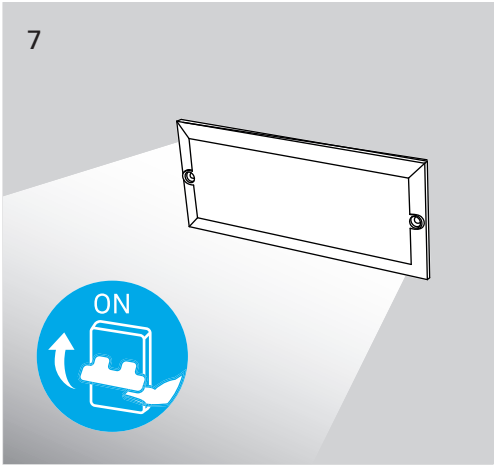

10-9-2021