Cardan Double

TC-0172-BLA

Recessed ceiling lights Cardan Double GU10 30W White IN IP20 / OUT IP23

TECHNICAL FEATURES



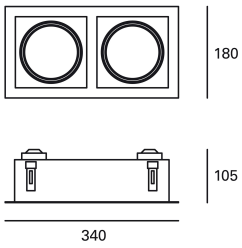

310x160 0-12

IN IP20 / OUT IP23 RF 850ºC 20°

Luminaire total power : 30W

Real lumens : 1782

Real lm/W : 59

Lens / reflector angle : MEDIUM 29º

Structure material : Steel

Structure finish : White

Max. size of light bulb : 120/55 mm

Recommended light bulb : GU10

Voltage / frequency : 100-240V ~ 50/60Hz

Warranty : 3 Years

Easily recyclable luminaire

LUMINOTECHNIC FEATURES

Luminance C0ºG65º: 517

Luminance C90ºG65º: 503

Lampholder	Quantity	Light source power (W)
GU10	2	Max. power 15W

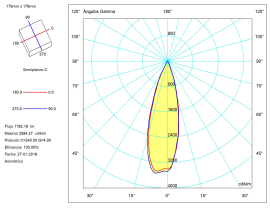

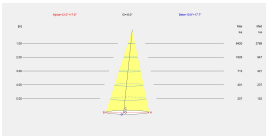

LOGISTICS

Net weight (kg): 1.44

Packaged weight (kg): 1.69

Packaging: 355mm x 120mm x 190mm

8 Un

LIGHT APPLICATION

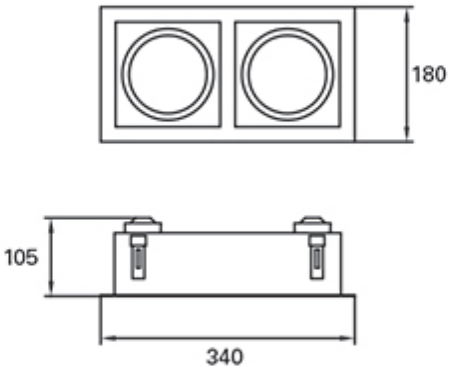

Image may not match reference. LEDS C4 reserves the right to amend any of the product's components. The data related to flux, power and colour temperature are subject to a tolerance of ±10%.

Luminaire
Code TC-0172-BLA
Name 15W-GU10 (AR-111)
Measurem.
Code TC-0172-BLA
Name 15W-GU10 (AR-111)

Luminaire Flux	1782.18 lm	Luminaire Power	14.30 W	Efficacy	124.63 lm/W	Efficiency	100.00%
Lamps Flux	1782.18 lm	Maximum value	6387.82 cd	Position	C=240.00 G=4.00	CG	Asymmetrical

Rectangular Luminaire	Length	179 mm	Width	179 mm	Height	103 mm
Rectangular Luminous Area	Length	179 mm	Width	179 mm	Height	102 mm
Horizontal Luminous Area	0.032041 m2		Emitting area on Plane 180°		0.018437 m2	
Emitting area on Plane 0°	0.018437 m2		Emitting area on Plane 270°		0.018437 m2	
Emitting area on Plane 90°	0.018437 m2		Glare area at 76°		0.025641 m2	
Coordinate system	CG		Symmetry Type		Asymmetrical	
Date	27-01-2016		Maximum Gamma Angle		90	
Measurement Distance	0.00		Measurement Flux		1782.18 lm	
Operator			Source Voltage [V]			
Temperature	25.00 °C		Source current [A]			
Humidity	60.00 %		Photocell			
Notes						

Luminaire Lamps

Line	Code	Name	Flux [lm]	Pow. [W]	Q.ty
	LED	LED - 7.15 W	891.09	7.15	2

C.I.E.	94 98 99 100 100	D DIN 5040	A60
F UTE	1.00 A	B NBN	BZ 1

179mm x 179mm

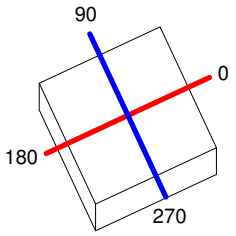

Semiplanos C

180.0 — 0.0

270.0 — 90.0

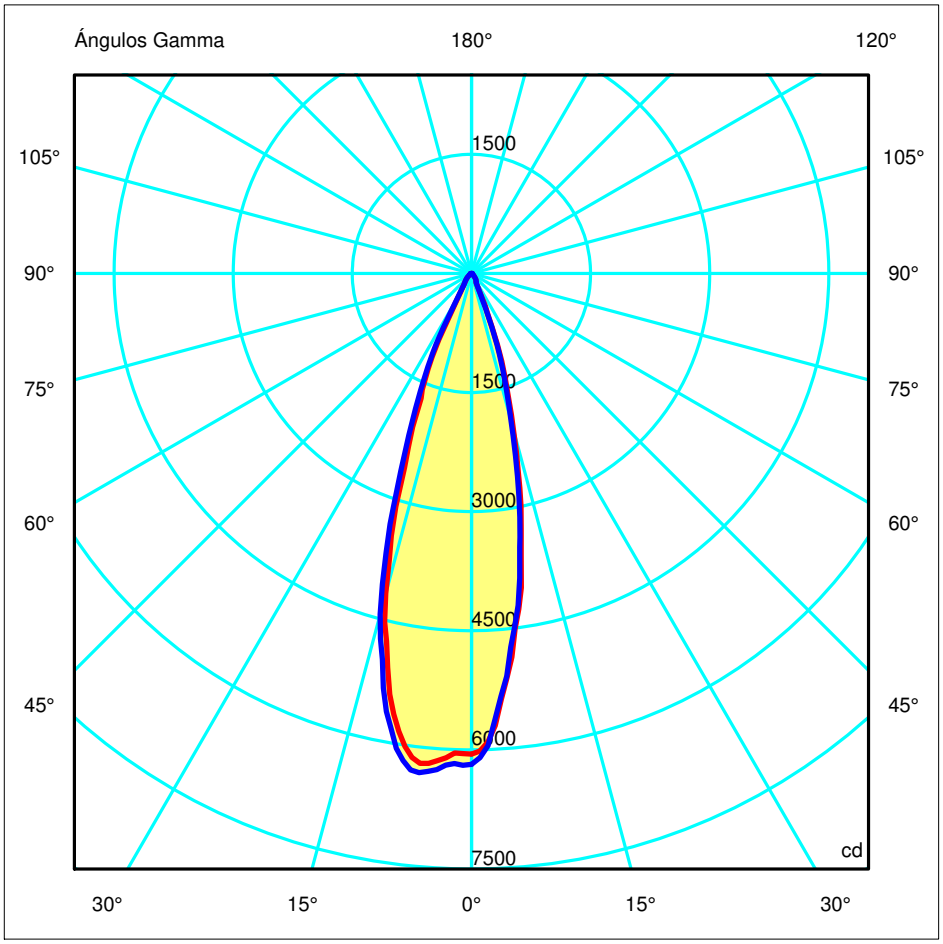

ULOR	0.00 %
DLOR	100.00 %
RN	0.00 %

Luminaire
Code TC-0172-BLA
Name 15W-GU10 (AR-111)
Measurem.
Code TC-0172-BLA
Name 15W-GU10 (AR-111)

Luminaire Flux	1782.18 lm	Luminaire Power	14.30 W	Efficacy	124.63 lm/W	Efficiency	100.00%
Lamps Flux	1782.18 lm	Maximum value	6387.82 cd	Position	C=240.00 G=4.00	CG	Asymmetrical

179mm x 179mm

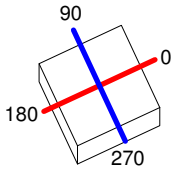

Semiplanos C

180.0 — 0.0

270.0 — 90.0

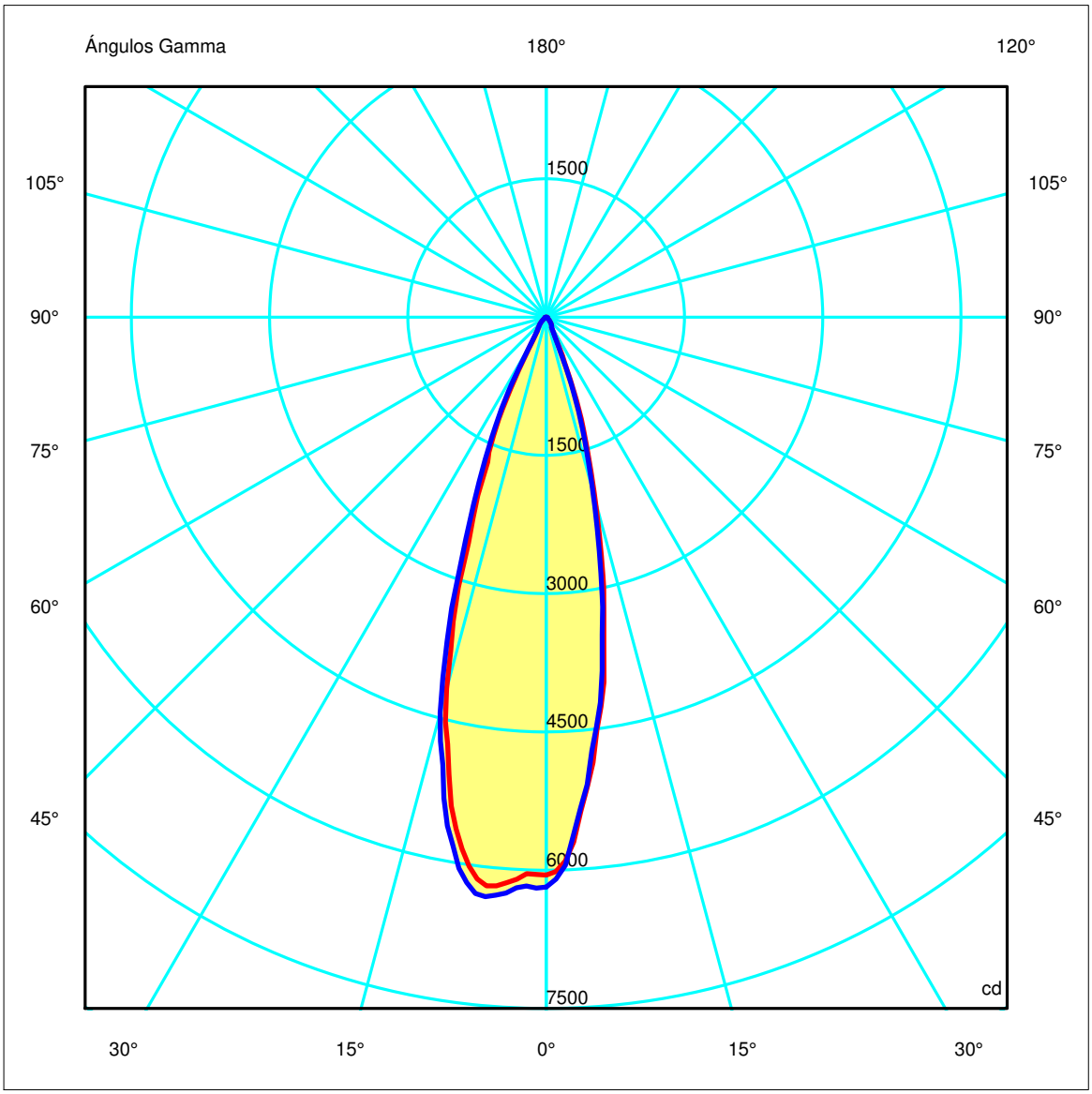

Luminaire
Code TC-0172-BLA
Name 15W-GU10 (AR-111)
Measurem.
Code TC-0172-BLA
Name 15W-GU10 (AR-111)

Luminaire Flux	1782.18 lm	Luminaire Power	14.30 W	Efficacy	124.63 lm/W	Efficiency	100.00%
Lamps Flux	1782.18 lm	Maximum value	6387.82 cd	Position	C=240.00 G=4.00	CG	Asymmetrical

Width at 50.00 % of Max Intensity

H[m]	1.00	2.00	3.00	4.00	5.00	H[m]	1.00	2.00	3.00	4.00	5.00
OA	0.31	0.62	0.93	1.24	1.55	OC	0.19	0.38	0.58	0.77	0.96
OB	0.22	0.44	0.66	0.88	1.09	OD	0.32	0.64	0.96	1.28	1.60

Luminous Intensities [cd]

	0	5	15	25	35	45	55	65	75	85
OA	6052.26	5114.63	2050.92	184.56	95.16	40.28	15.64	15.64	10.92	10.49
OB	6052.26	6192.95	4172.62	1215.78	157.55	83.02	21.58	14.86	16.17	10.49
OC	6181.59	5090.16	1927.71	161.40	93.59	38.89	15.20	15.20	10.31	9.79
OD	6181.59	6294.32	4444.38	1298.54	161.84	85.46	21.58	14.33	15.55	9.87

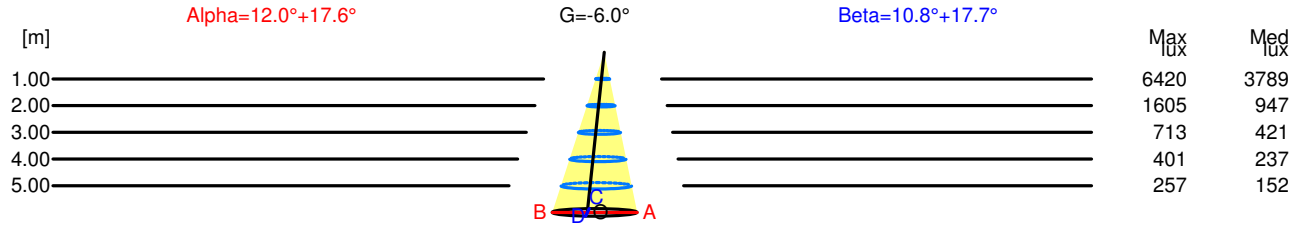

H[m]	D[m]	Max lux	Med lux	Alpha=12.0°+17.6° G=-6.0
1.00	0.53	6420	3789	
2.00	1.06	1605	947	
3.00	1.59	713	421	
4.00	2.12	401	237	
5.00	2.65	257	152	

H[m]	D[m]	Max lux	Med lux	Beta=17.7°+10.8° G=0.0
1.00	0.51	6420	3789	
2.00	1.02	1605	947	
3.00	1.54	713	421	
4.00	2.05	401	237	
5.00	2.56	257	152	

Luminaire
Code TC-0172-BLA
Name 15W-GU10 (AR-111)
Measurem.
Code TC-0172-BLA
Name 15W-GU10 (AR-111)

Luminaire Flux	1782.18 lm	Luminaire Power	14.30 W	Efficacy	124.63 lm/W	Efficiency	100.00%
Lamps Flux	1782.18 lm	Maximum value	6387.82 cd	Position	C=240.00 G=4.00	CG	Asymmetrical

Isolux (Floor)

Luminaire position X=0.00m Y=0.00m Z=2.50m

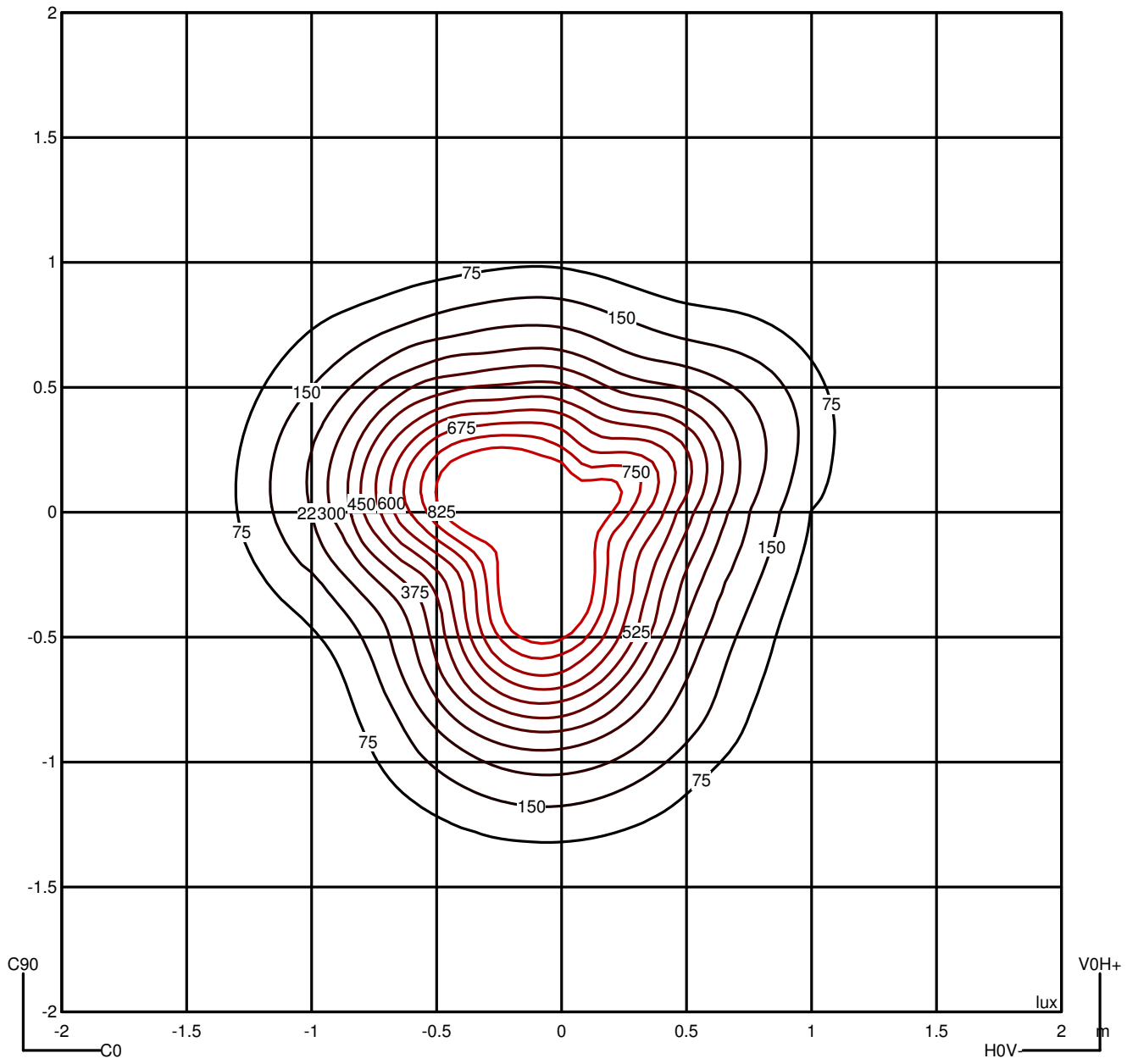

Luminaire
Code TC-0172-BLA
Name 15W-GU10 (AR-111)
Measurem.
Code TC-0172-BLA
Name 15W-GU10 (AR-111)

Luminaire Flux	1782.18 lm	Luminaire Power	14.30 W	Efficacy	124.63 lm/W	Efficiency	100.00%
Lamps Flux	1782.18 lm	Maximum value	6387.82 cd	Position	C=240.00 G=4.00	CG	Asymmetrical

Average Luminance [cd/m²]

	45°	50°	55°	60°	65°	70°	75°	80°	85°	
0.0°	1129	564	467	453	517	578	419	442	496	---
90.0°	1089	546	454	443	503	568	395	420	463	---

Flujo montado o vista transversal

		Iluminancia (lx)										
A	A	2000	1000	750	500		<300					1.15
B	1		2000	1500	1000	750	500	<300				1.5
C					2000		1000	500	<300			1.85
D	2						2000	1000	500	<300		2.2
E	3							2000	1000	500	<300	2.55

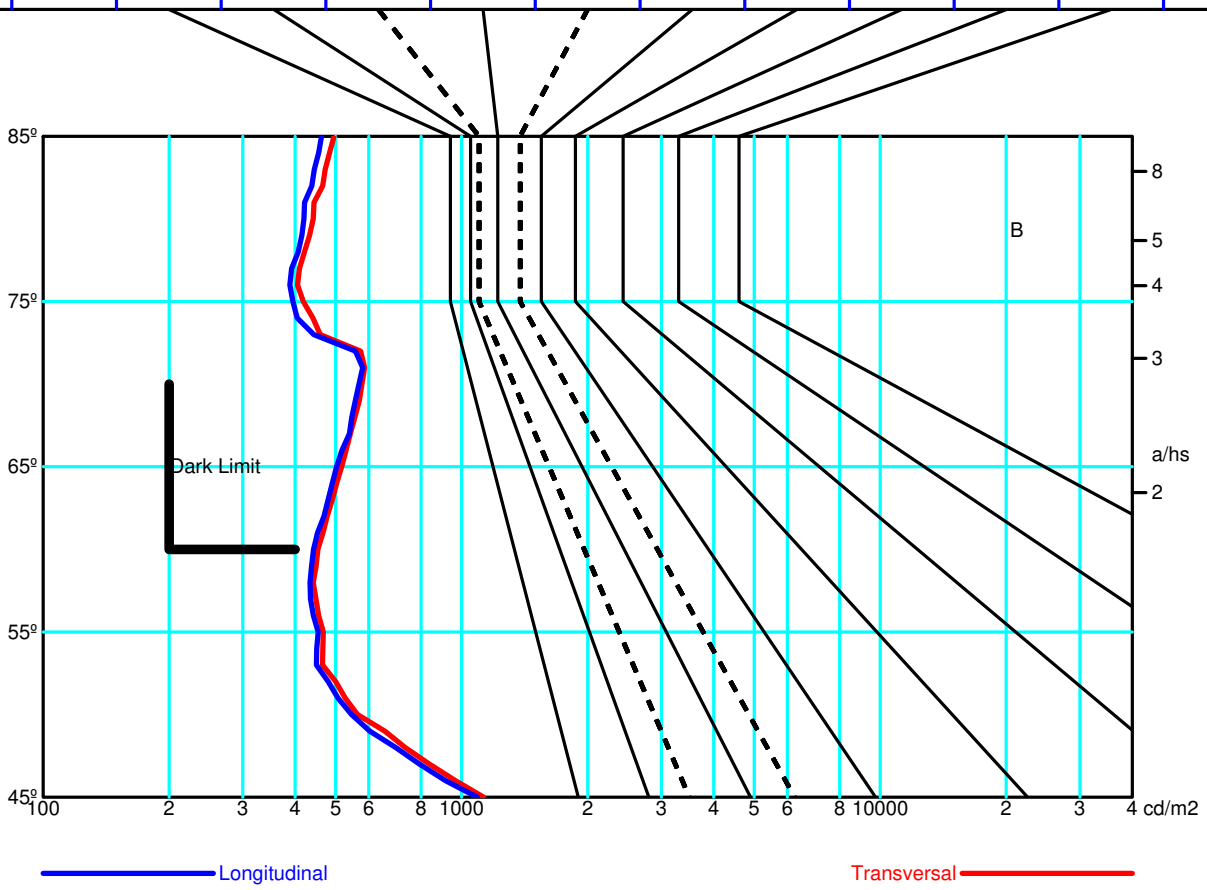

Luminaire
Code TC-0172-BLA
Name 15W-GU10 (AR-111)
Measurem.
Code TC-0172-BLA
Name 15W-GU10 (AR-111)

Luminaire Flux	1782.18 lm	Luminaire Power	14.30 W	Efficacy	124.63 lm/W	Efficiency	100.00%
Lamps Flux	1782.18 lm	Maximum value	6387.82 cd	Position	C=240.00 G=4.00	CG	Asymmetrical

179mm x 179mm

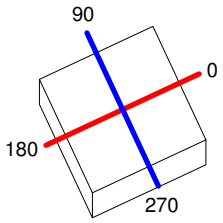

Semiplanos C

180.0 0.0
270.0 90.0

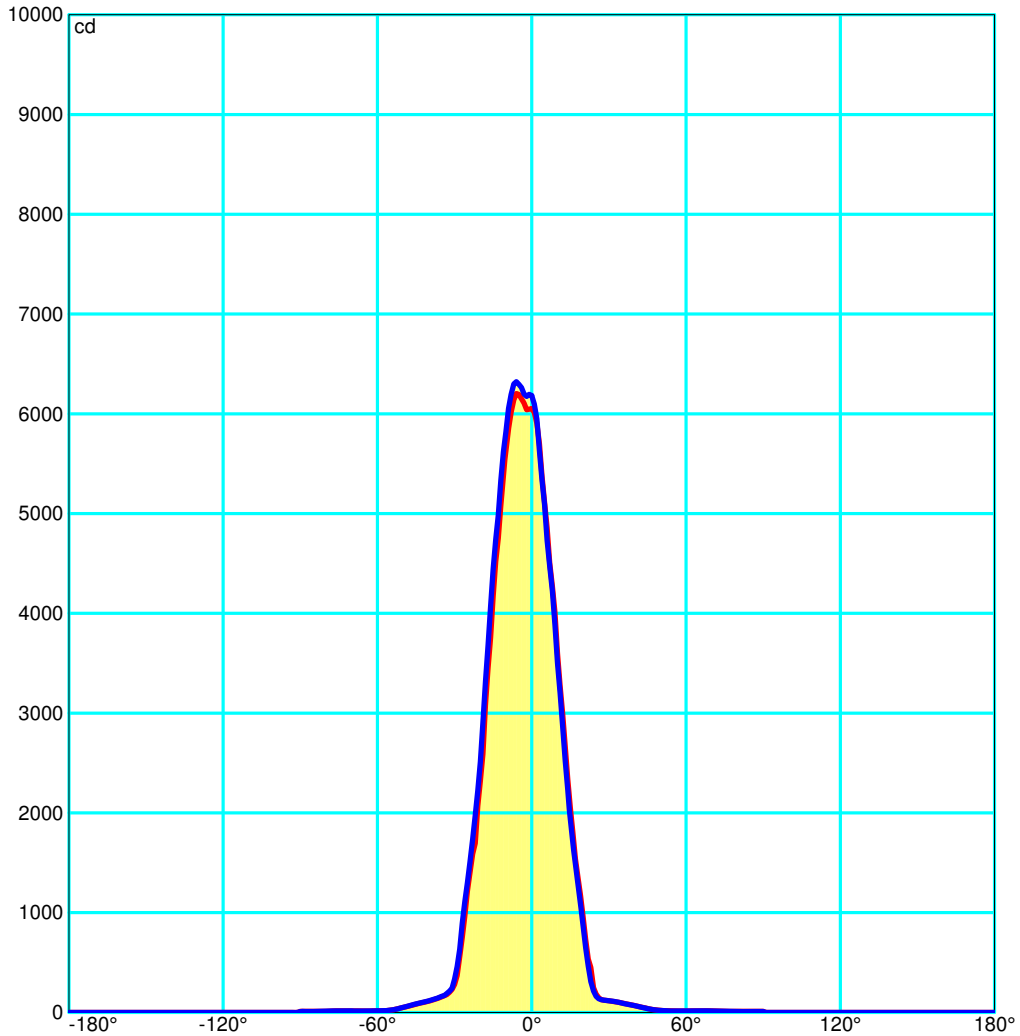

Luminaire
Code TC-0172-BLA
Name 15W-GU10 (AR-111)
Measurem.
Code TC-0172-BLA
Name 15W-GU10 (AR-111)

Luminaire Flux	1782.18 lm	Luminaire Power	14.30 W	Efficacy	124.63 lm/W	Efficiency	100.00%
Lamps Flux	1782.18 lm	Maximum value	6387.82 cd	Position	C=240.00 G=4.00	CG	Asymmetrical

UGR
S = 0.250

Reflectancies										
Ceiling/Cavity	0.7	0.7	0.5	0.5	0.3	0.7	0.7	0.5	0.5	0.3
Walls	0.5	0.3	0.5	0.3	0.3	0.5	0.3	0.5	0.3	0.3
WorkingPlane	0.2	0.2	0.2	0.2	0.2	0.2	0.2	0.2	0.2	0.2
RoomDimensions	ViewedCrosswise					ViewedEndwise				
x=2H y=2H	5.6	6.4	5.9	6.5	7.3	6.2	6.9	6.4	7.1	7.3
x=2H y=3H	6.2	6.8	6.5	7.1	7.7	6.6	7.3	6.9	7.5	7.7
x=2H y=4H	6.8	7.4	7.1	7.6	8.2	7.1	7.7	7.4	7.9	8.2
x=2H y=6H	7.3	7.9	7.6	8.1	8.7	7.6	8.1	7.9	8.4	8.7
x=2H y=8H	7.5	8.0	7.9	8.4	8.9	7.7	8.3	8.1	8.6	8.9
x=2H y=12H	7.8	8.3	8.1	8.6	9.1	8.0	8.5	8.3	8.8	9.1
x=4H y=2H	5.7	6.3	6.0	6.6	7.3	6.2	6.8	6.5	7.1	7.3
x=4H y=3H	6.5	7.0	6.8	7.3	8.0	6.9	7.4	7.2	7.7	8.0
x=4H y=4H	7.2	7.6	7.6	8.0	8.6	7.5	7.9	7.9	8.3	8.6
x=4H y=6H	7.9	8.3	8.3	8.7	9.3	8.1	8.5	8.6	8.9	9.3
x=4H y=8H	8.3	8.6	8.7	9.0	9.5	8.4	8.7	8.8	9.1	9.5
x=4H y=12H	8.6	8.9	9.0	9.3	9.8	8.7	9.0	9.2	9.4	9.8
x=8H y=4H	7.4	7.7	7.8	8.1	8.8	7.7	8.0	8.1	8.4	8.8
x=8H y=6H	8.2	8.5	8.7	8.9	9.5	8.4	8.7	8.9	9.1	9.5
x=8H y=8H	8.6	8.9	9.1	9.3	9.9	8.8	9.0	9.2	9.4	9.9
x=8H y=12H	9.2	9.3	9.6	9.8	10.4	9.2	9.4	9.7	9.9	10.4
x=12H y=4H	7.4	7.7	7.8	8.1	8.8	7.7	7.9	8.1	8.4	8.8
x=12H y=6H	8.3	8.5	8.7	8.9	9.6	8.5	8.7	8.9	9.1	9.6
x=12H y=8H	8.8	8.9	9.2	9.4	10.0	8.9	9.1	9.4	9.5	10.0

Luminaire
Code TC-0172-BLA
Name 15W-GU10 (AR-111)
Measurem.
Code TC-0172-BLA
Name 15W-GU10 (AR-111)

Luminaire Flux	1782.18 lm	Luminaire Power	14.30 W	Efficacy	124.63 lm/W	Efficiency	100.00%
Lamps Flux	1782.18 lm	Maximum value	6387.82 cd	Position	C=240.00 G=4.00	CG	Asymmetrical

Flujo Total=1782.18 Flujo Luminaria=1782.18

RI	0.60	0.80	1.00	1.25	1.50	2.00	2.50	3.00	4.00	5.00	10.00	20.00
DRR	0.70	0.74	0.79	0.83	0.86	0.90	0.93	0.95	0.97	0.98	1.01	1.02
RC	-	-	-	-	-	-	-	-	-	-	-	-

Flujo Zonal por 1000 Lúmenes

Y°	10	20	30	40	50	60	70	80	90	100	110	120	130	140	150	160	170	180
ZF(Y)	279	721	893	939	967	978	986	994	1000	1000	1000	1000	1000	1000	1000	1000	1000	1000

Códigos de Flujo C.I.E.
94 98 99 100 100

C.I.E.	-/-/-/-/-/-/-/-/-/-/-	LOR	100.00000 %
D DIN 5040	A60	ULOR	0.00000 %
F UTE	1.00 A	DLOR	100.00000 %
B NBN	BZ 1	UFF	0.00000 %
RN	0.00000 %	DFF	100.00000 %
BLF	1.0	FFR	0.00000 %

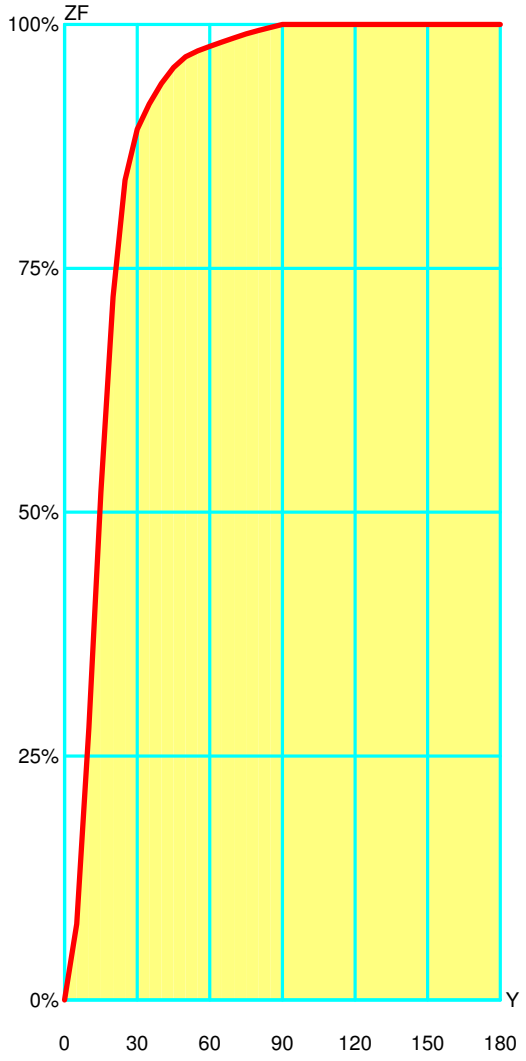

Flujo Zonal				
Gamma °	Flujo	Suma lm	Flujo [%]	Suma [%]
0°	0.00	0.00	0.00%	0.00 %
5°	78.01	78.01	7.80 %	7.80 %
10°	201.05	279.06	20.10 %	27.91 %
15°	241.61	520.67	24.16 %	52.07 %
20°	200.09	720.76	20.01 %	72.08 %
25°	119.71	840.46	11.97 %	84.05 %
30°	52.05	892.52	5.21 %	89.25 %
35°	25.87	918.39	2.59 %	91.84 %
40°	21.00	939.39	2.10 %	93.94 %
45°	16.46	955.85	1.65 %	95.59 %
50°	10.90	966.76	1.09 %	96.68 %
55°	6.17	972.93	0.62 %	97.29 %
60°	4.62	977.56	0.46 %	97.76 %
65°	4.28	981.84	0.43 %	98.18 %
70°	4.33	986.17	0.43 %	98.62 %
75°	4.15	990.32	0.42 %	99.03 %
80°	3.45	993.77	0.34 %	99.38 %
85°	3.12	996.89	0.31 %	99.69 %
90°	3.11	1000.00	0.31 %	100.00 %
95°	0.00	1000.00	0.00 %	100.00 %
100°	0.00	1000.00	0.00 %	100.00 %
105°	0.00	1000.00	0.00 %	100.00 %
110°	0.00	1000.00	0.00 %	100.00 %
115°	0.00	1000.00	0.00 %	100.00 %
120°	0.00	1000.00	0.00 %	100.00 %
125°	0.00	1000.00	0.00 %	100.00 %
130°	0.00	1000.00	0.00 %	100.00 %
135°	0.00	1000.00	0.00 %	100.00 %
140°	0.00	1000.00	0.00 %	100.00 %
145°	0.00	1000.00	0.00 %	100.00 %
150°	0.00	1000.00	0.00 %	100.00 %
155°	0.00	1000.00	0.00 %	100.00 %
160°	0.00	1000.00	0.00 %	100.00 %
165°	0.00	1000.00	0.00 %	100.00 %
170°	0.00	1000.00	0.00 %	100.00 %
175°	0.00	1000.00	0.00 %	100.00 %
180°	0.00	1000.00	0.00 %	100.00 %

Luminaire
Code TC-0172-BLA
Name 15W-GU10 (AR-111)
Measurem.
Code TC-0172-BLA
Name 15W-GU10 (AR-111)

Luminaire Flux	1782.18 lm	Luminaire Power	14.30 W	Efficacy	124.63 lm/W	Efficiency	100.00%
Lamps Flux	1782.18 lm	Maximum value	6387.82 cd	Position	C=240.00 G=4.00	CG	Asymmetrical

Pavement			Road		
Piano	0	0.00%	Piano	0	0.00%
Piano	-5	14.63%	Piano	5	16.36%
Piano	-10	26.95%	Piano	10	29.56%
Piano	-15	36.99%	Piano	15	37.72%
Piano	-20	43.98%	Piano	20	41.79%
Piano	-25	48.04%	Piano	25	43.29%
Piano	-30	49.88%	Piano	30	44.11%
Piano	-35	50.76%	Piano	35	44.75%
Piano	-40	51.41%	Piano	40	45.22%
Piano	-45	51.89%	Piano	45	45.53%
Piano	-50	52.22%	Piano	50	45.73%
Piano	-55	52.42%	Piano	55	45.89%
Piano	-60	52.58%	Piano	60	46.04%
Piano	-65	52.71%	Piano	65	46.18%
Piano	-70	52.84%	Piano	70	46.31%
Piano	-75	52.97%	Piano	75	46.43%
Piano	-80	53.08%	Piano	80	46.52%
Piano	-85	53.18%	Piano	85	46.62%
Piano	-90	53.28%	Piano	90	46.72%

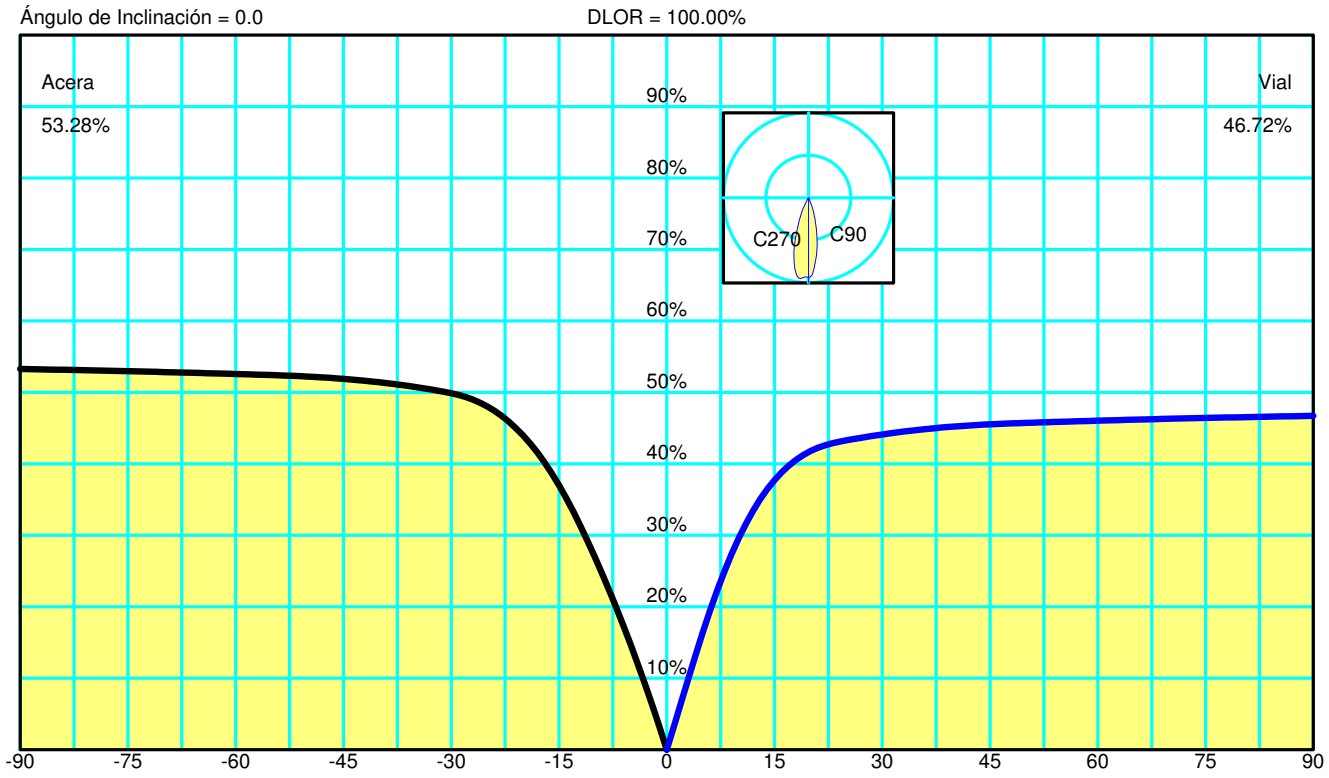

Spread	2.7°	Estrecho	DLOR	100.00000 %	
Throw	4.7°	Corto	ULOR	0.00000 %	
SLI (deslumbramiento)	8.5	Concentrado	Rendimiento	100.00000 %	
Cutoff CIE	Cutoff - Max: C=240.0° Gamma=4.0°		RN	0.00000 %	
Cutoff Iesna	Cutoff		Clase de Intensidad Luminosa	G5	
DIN5044	KB1		Índice de Deslumbramiento	D6	

IESNA Type I Very Short Asymmetrical

Luminaire
Code TC-0172-BLA
Name 15W-GU10 (AR-111)
Measurem.
Code TC-0172-BLA
Name 15W-GU10 (AR-111)

Luminaire Flux	1782.18 lm	Luminaire Power	14.30 W	Efficacy	124.63 lm/W	Efficiency	100.00%
Lamps Flux	1782.18 lm	Maximum value	6387.82 cd	Position	C=240.00 G=4.00	CG	Asymmetrical

US ROAD STANDARDS

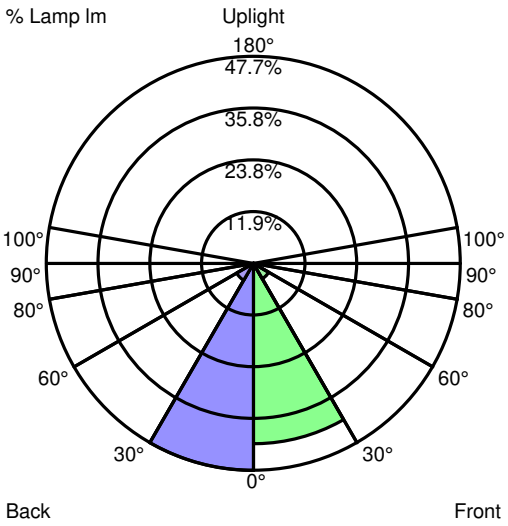

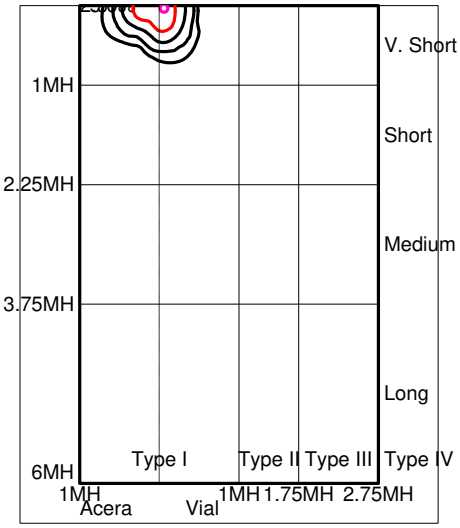

Luminaire Classification System (LCS)				
LCS Zone		Lumens	%Lamp	%Lum
FL	0° -- 30°	740.4 lm	41.5 %	41.5 %
FM	30° -- 60°	72.4 lm	4.1 %	4.1 %
FH	60° -- 80°	14.3 lm	0.8 %	0.8 %
FVH	80° -- 90°	5.5 lm	0.3 %	0.3 %
BL	0° -- 30°	849.9 lm	47.7 %	47.7 %
BM	30° -- 60°	79.6 lm	4.5 %	4.5 %
BH	60° -- 80°	14.5 lm	0.8 %	0.8 %
BVH	80° -- 90°	5.6 lm	0.3 %	0.3 %
UL	90° -- 100°	0.0 lm	0.0 %	0.0 %
UH	100° -- 180°	0.0 lm	0.0 %	0.0 %
TOTALS		1782.2 lm	100.0 %	100.0 %
BUG B2 U0 G0 Type I Very Short Asymmetrical				

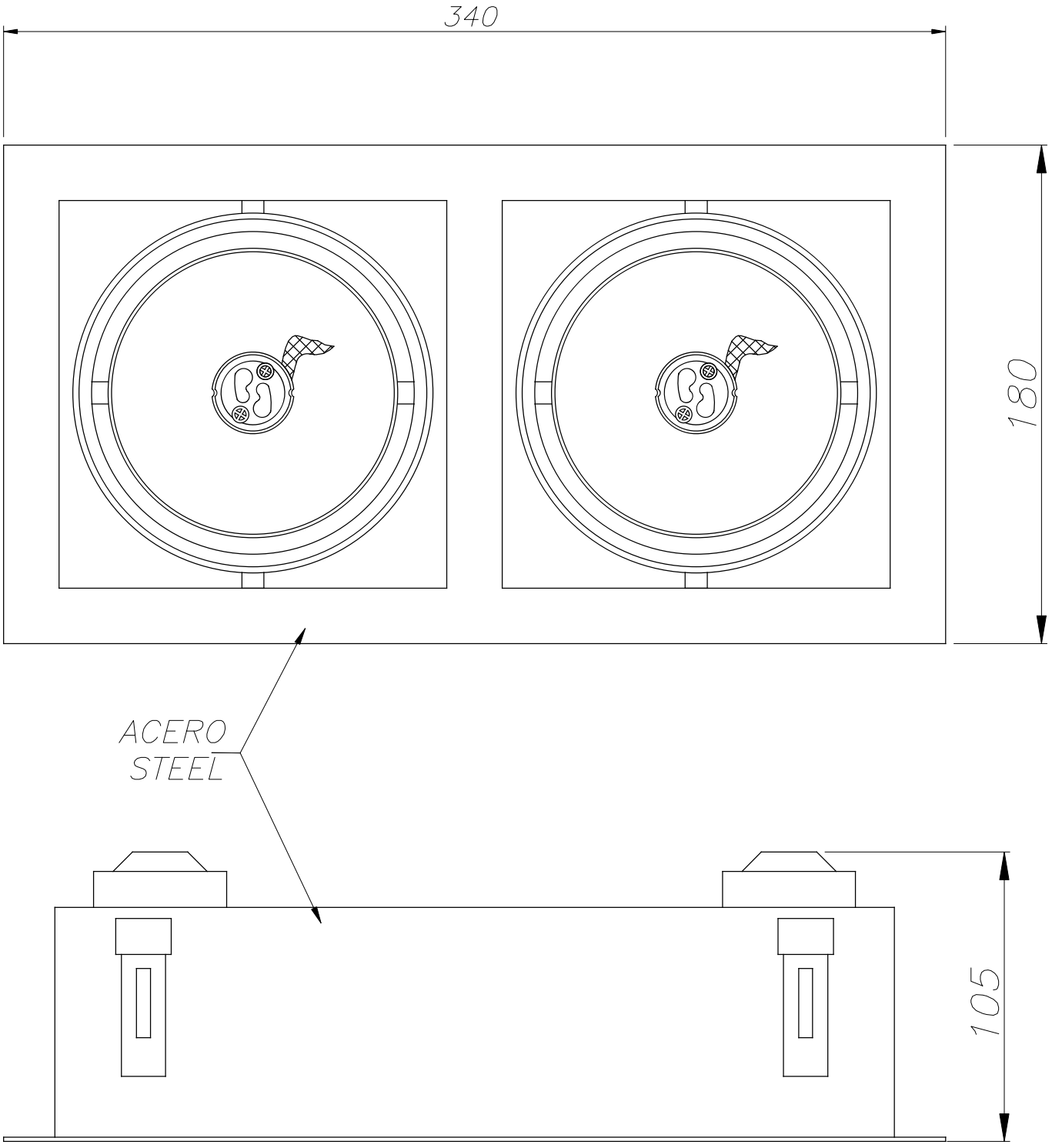

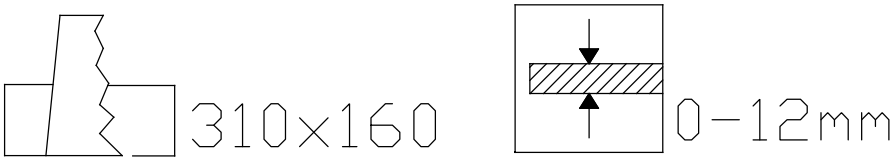

11-02-16

Cardan

TC-0172

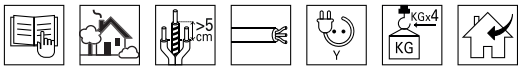

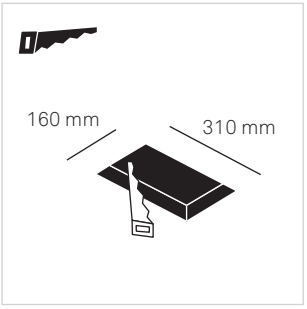

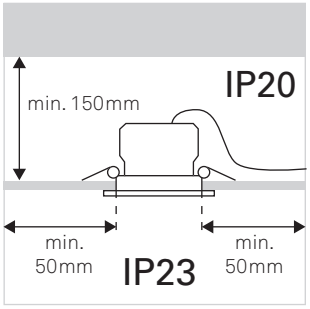

1

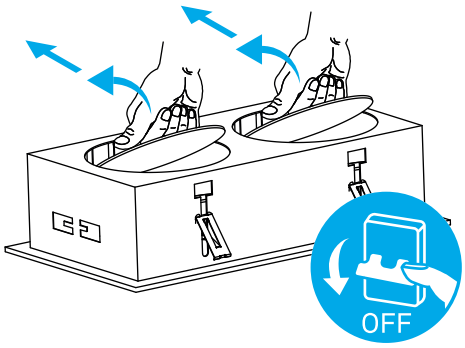

2

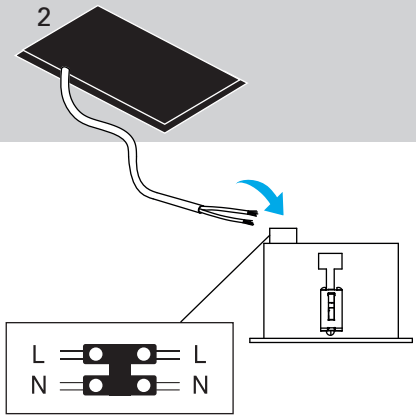

3

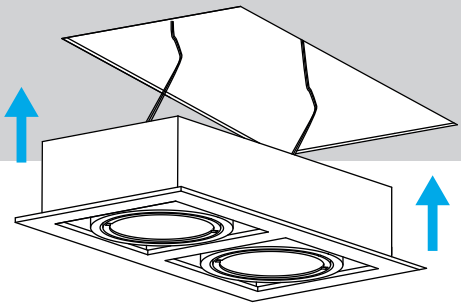

4

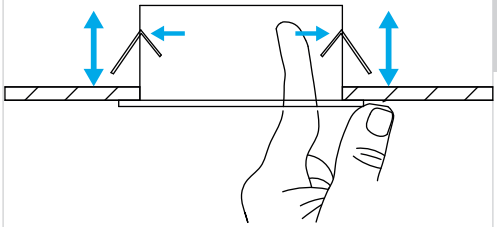

5

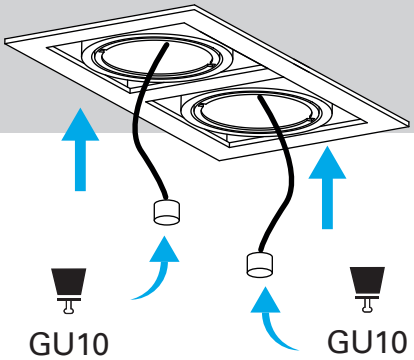

6

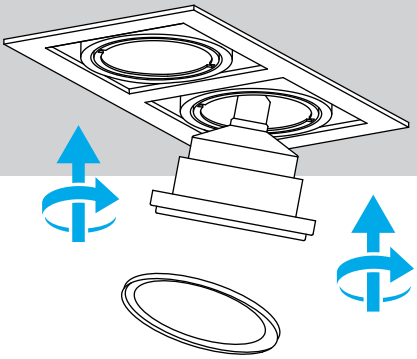

7

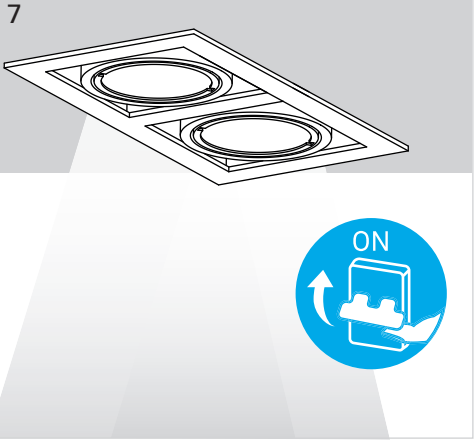

27-08-2021