BELLE

DE-0228-NEG

Pendant IP20 BELLE E27 15W Black 248lm



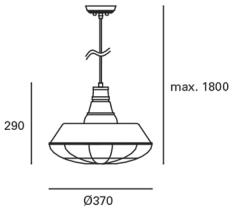

TECHNICAL FEATURES

IP20 RF 960ºC

Luminaire total power : 15W

Real lumens : 248

Real lm/W : 4

Lens / reflector angle : HORIZONTAL 155º

Structure material : Steel

Structure finish : Black

Max. size of light bulb : 200/100 mm

Recommended light bulb : E27

Voltage / frequency : 100-240V ~ 50/60Hz

Warranty : 2 Years

Easily recyclable luminaire

LUMINOTECHNIC FEATURES

Lampholder	Quantity	Light source power (W)	Correlated Colour Temperature (CCT)
E27	1	Max. power 15W	-

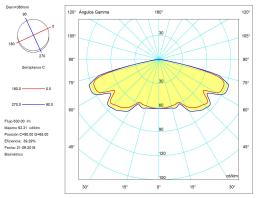

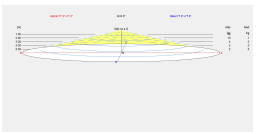

LOGISTICS

Net weight (kg): 1.4

Packaged weight (kg): 2.49

Packaging: 400mm x 400mm x 220mm

2 Un

LIGHT APPLICATION

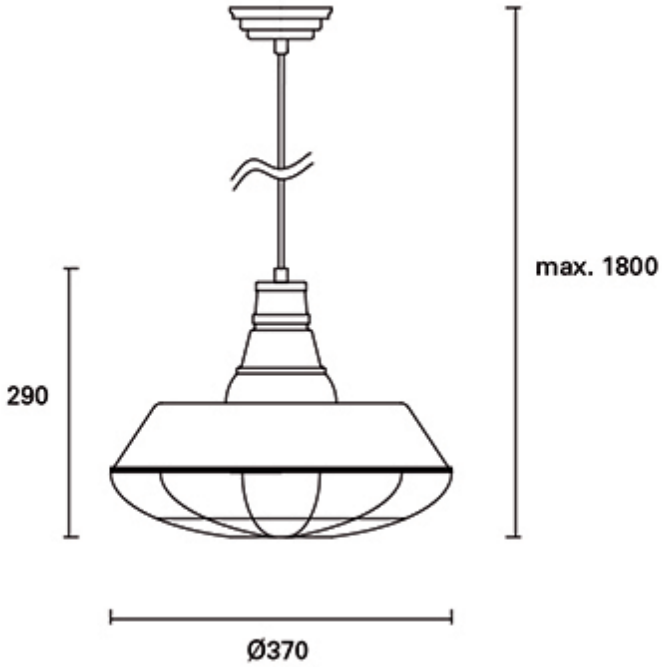

Image may not match reference. LEDS C4 reserves the right to amend any of the product's components. The data related to flux, power and colour temperature are subject to a tolerance of ±10%.

Luminaire
Code DE-0228-NEG
Name Colgante BELLE 60W E27
Measurem.
Code DE-0228-NEG
Name Colgante BELLE 60W E27

Luminaire Flux	247.50 lm	Luminaire Power	42.00 W	Efficacy	5.89 lm/W	Efficiency	39.29%
Lamps Flux	630.00 lm	Maximum value	93.31 cd/klm	Position	C=90.00 G=65.00	CG	Double Symmetrical

Round Luminaire	Diam. 360 mm	Height	235 mm
Round Luminous Area	Diam. 355 mm	Height	0 mm
Horizontal Luminous Area	0.098980 m2	Emitting area on Plane 180°	0.000000 m2
Emitting area on Plane 0°	0.000000 m2	Emitting area on Plane 270°	0.000000 m2
Emitting area on Plane 90°	0.000000 m2	Glare area at 76°	0.023945 m2
Coordinate system	CG	Symmetry Type	Double Symmetrical
Date	21-09-2016	Maximum Gamma Angle	90
Measurement Distance	0.00	Measurement Flux	630.00 lm
Operator	Asselum T2	Source Voltage [V]	
Temperature	25.00 °C	Source current [A]	
Humidity	60.00 %	Photocell	
Notes			

Luminaire Lamps

Line	Code	Name	Flux [lm]	Pow. [W]	Q.ty
	ECOClassic 42W 230	ECOClassic 42W 230	630.00	42.00	1

C.I.E.	27 58 92 100 39	D DIN 5040	A10
F UTE	0.39 H	B NBN	BZ 7 / 1.5 / BZ 6

Diam=360mm

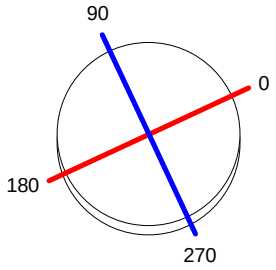

C Halfplanes

180.0 0.0
270.0 90.0

ULOR	0.00 %
DLOR	39.29 %
RN	0.00 %

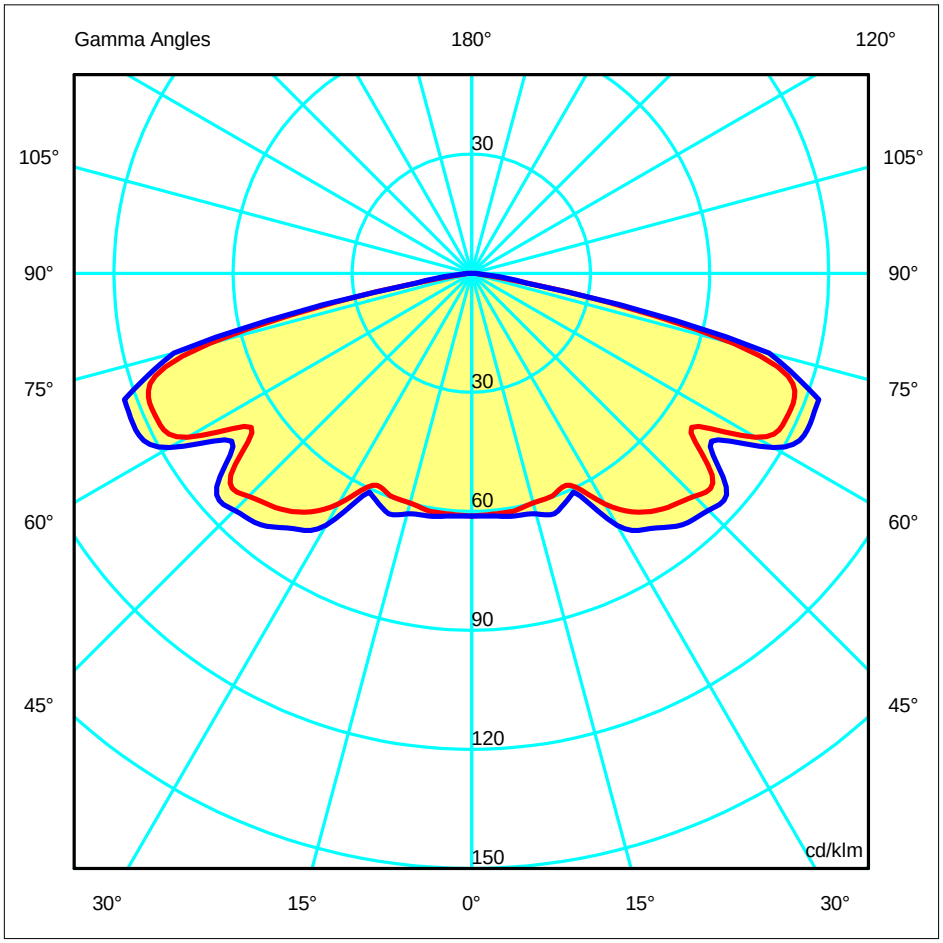

Luminaire
Code DE-0228-NEG
Name Colgante BELLE 60W E27
Measurem.
Code DE-0228-NEG
Name Colgante BELLE 60W E27

Luminaire Flux	247.50 lm	Luminaire Power	42.00 W	Efficacy	5.89 lm/W	Efficiency	39.29%
Lamps Flux	630.00 lm	Maximum value	93.31 cd/klm	Position	C=90.00 G=65.00	CG	Double Symmetrical

Luminous Intensity Table cd/klm **Table 1/1**

	C 0.00	C 15.00	C 30.00	C 45.00	C 60.00	C 75.00	C 90.00
G 0.0	61.20	61.20	61.20	61.20	61.20	61.20	61.20
G 5.0	60.95	60.99	61.29	61.34	61.34	61.29	61.40
G 10.0	60.86	61.02	61.68	61.65	61.85	62.10	62.10
G 15.0	59.91	60.34	61.30	61.61	62.48	62.53	62.74
G 20.0	59.70	60.34	61.40	62.17	63.57	63.23	63.68
G 25.0	58.94	57.74	59.64	58.24	61.56	59.11	60.80
G 30.0	67.09	66.42	69.82	68.34	74.01	70.43	73.29
G 35.0	73.48	71.29	75.40	74.27	80.49	76.51	78.52
G 40.0	76.96	74.56	79.52	77.58	83.50	79.20	82.68
G 45.0	79.45	76.26	82.33	78.91	84.90	80.07	84.45
G 50.0	79.11	75.68	82.67	78.00	84.02	79.33	83.77
G 55.0	67.69	64.01	71.70	63.66	72.63	64.17	73.75
G 60.0	82.63	80.16	87.31	80.97	86.23	82.23	87.87
G 65.0	87.28	84.11	92.47	85.28	91.39	86.92	93.31
G 70.0	86.61	83.43	92.29	84.77	91.05	86.85	93.05
G 75.0	68.39	73.21	82.07	76.32	82.01	78.15	77.60
G 80.0	15.24	17.69	28.12	24.08	23.84	23.58	14.04
G 85.0	1.70	2.08	2.56	2.31	2.77	2.52	2.14
G 90.0	0.78	0.81	0.84	0.83	0.83	0.77	0.79

Luminaire
Code DE-0228-NEG
Name Colgante BELLE 60W E27
Measurem.
Code DE-0228-NEG
Name Colgante BELLE 60W E27

Luminaire Flux	247.50 lm	Luminaire Power	42.00 W	Efficacy	5.89 lm/W	Efficiency	39.29%
Lamps Flux	630.00 lm	Maximum value	93.31 cd/klm	Position	C=90.00 G=65.00	CG	Double Symmetrical

Diam=360mm

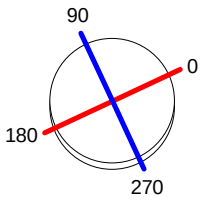

C Halfplanes



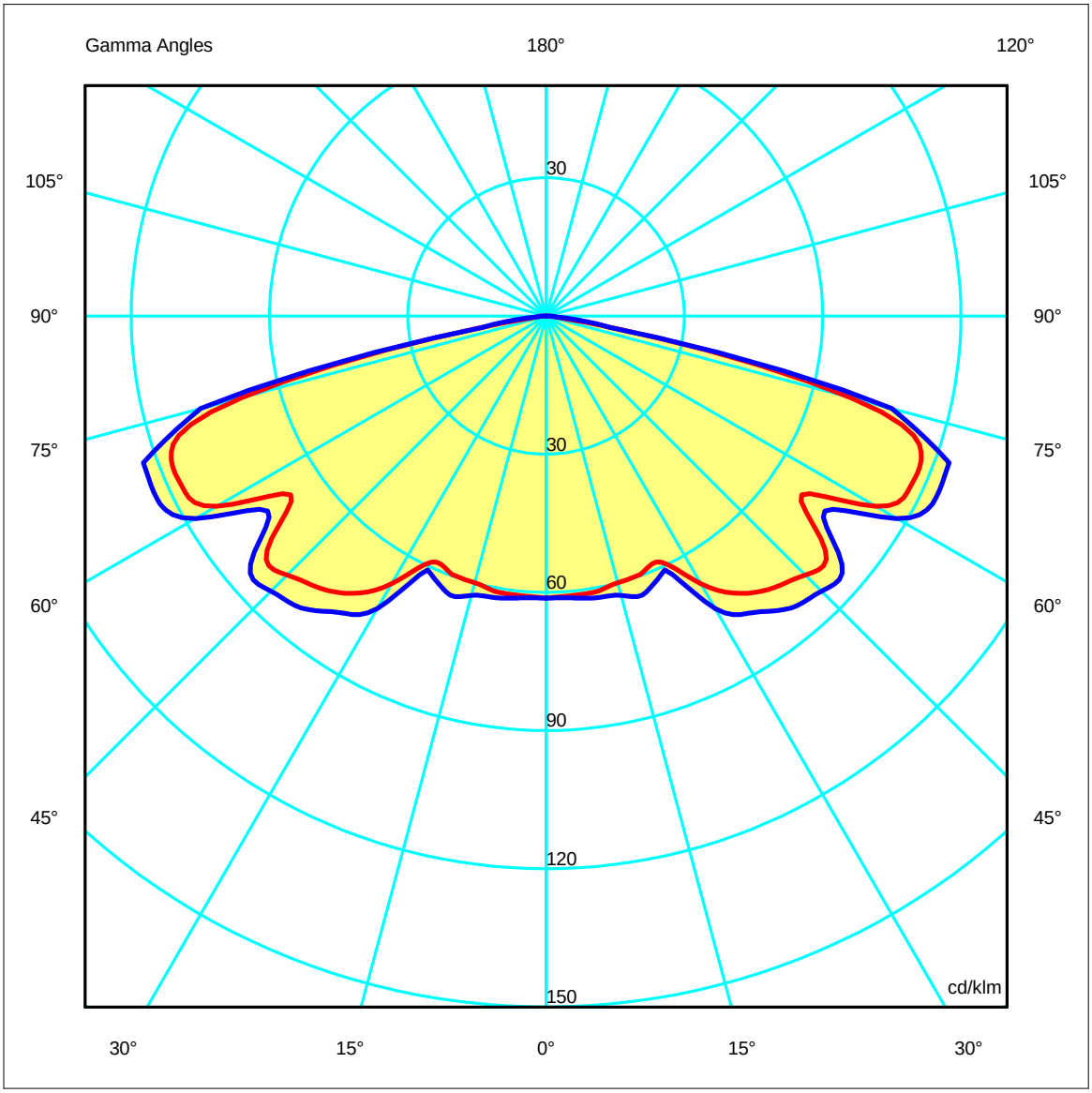

Luminaire
Code DE-0228-NEG
Name Colgante BELLE 60W E27
Measurem.
Code DE-0228-NEG
Name Colgante BELLE 60W E27

Luminaire Flux	247.50 lm	Luminaire Power	42.00 W	Efficacy	5.89 lm/W	Efficiency	39.29%
Lamps Flux	630.00 lm	Maximum value	93.31 cd/klm	Position	C=90.00 G=65.00	CG	Double Symmetrical

Width at 50.00 % of Max Intensity

H[m]	1.00	2.00	3.00	4.00	5.00	H[m]	1.00	2.00	3.00	4.00	5.00
OA	4.44	8.88	13.31	17.75	22.19	OC	4.56	9.11	13.67	18.23	22.78
OB	4.44	8.88	13.31	17.75	22.19	OD	4.56	9.11	13.67	18.23	22.78

Luminous Intensities [cd/klm]

	0	5	15	25	35	45	55	65	75	85
OA	38.55	38.40	37.75	37.13	46.29	50.05	42.64	54.99	43.08	1.07
OB	38.55	38.40	37.75	37.13	46.29	50.05	42.64	54.99	43.08	1.07
OC	38.55	38.68	39.53	38.31	49.47	53.20	46.46	58.79	48.89	1.35
OD	38.55	38.68	39.53	38.31	49.47	53.20	46.46	58.79	48.89	1.35

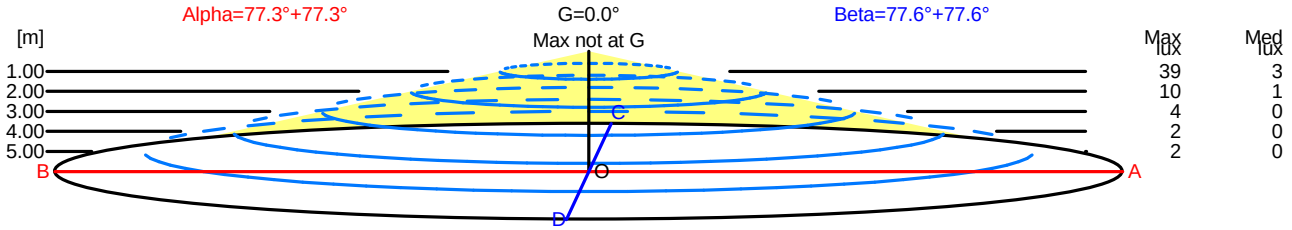

H[m]	D[m]	Max lux	Med lux
1.00	8.88	39	3
2.00	17.75	10	1
3.00	26.63	4	0
4.00	35.50	2	0
5.00	44.38	2	0

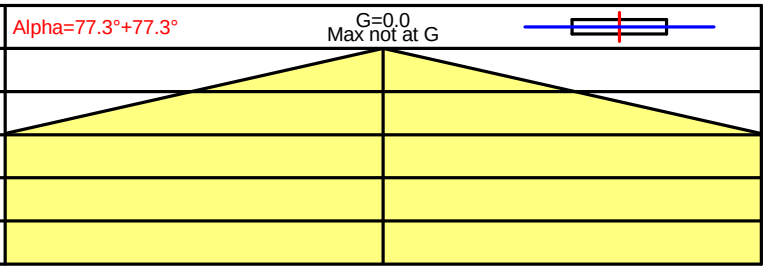

H[m]	D[m]	Max lux	Med lux
1.00	9.11	39	3
2.00	18.23	10	1
3.00	27.34	4	0
4.00	36.45	2	0
5.00	45.57	2	0

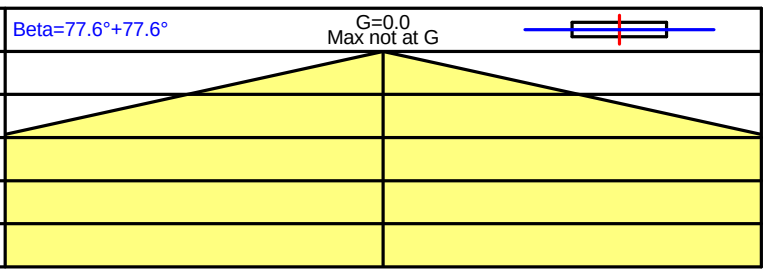

Luminaire
Code DE-0228-NEG
Name Colgante BELLE 60W E27
Measurem.
Code DE-0228-NEG
Name Colgante BELLE 60W E27

Luminaire Flux	247.50 lm	Luminaire Power	42.00 W	Efficacy	5.89 lm/W	Efficiency	39.29%
Lamps Flux	630.00 lm	Maximum value	93.31 cd/klm	Position	C=90.00 G=65.00	CG	Double Symmetrical

UGR
S = 0.250

Reflectancies										
Ceiling/Cavity	0.7	0.7	0.5	0.5	0.3	0.7	0.7	0.5	0.5	0.3
Walls	0.5	0.3	0.5	0.3	0.3	0.5	0.3	0.5	0.3	0.3
WorkingPlane	0.2	0.2	0.2	0.2	0.2	0.2	0.2	0.2	0.2	0.2
RoomDimensions	ViewedCrosswise					ViewedEndwise				
x=2H y=2H	12.8	14.4	13.1	14.7	15.1	13.0	14.6	13.3	14.8	15.1
x=2H y=3H	16.4	18.0	16.8	18.2	18.8	16.7	18.2	17.1	18.5	18.8
x=2H y=4H	18.0	19.5	18.4	19.8	20.5	18.4	19.8	18.8	20.1	20.5
x=2H y=6H	18.5	19.8	18.8	20.1	20.9	18.9	20.3	19.3	20.6	20.9
x=2H y=8H	18.4	19.7	18.8	20.0	20.9	18.9	20.2	19.3	20.5	20.9
x=2H y=12H	18.4	19.6	18.8	20.0	20.8	18.9	20.1	19.3	20.4	20.8
x=4H y=2H	14.4	15.8	14.7	16.1	16.5	14.4	15.9	14.8	16.2	16.5
x=4H y=3H	18.1	19.3	18.5	19.6	20.1	18.2	19.4	18.6	19.8	20.1
x=4H y=4H	19.7	20.8	20.1	21.2	21.8	19.9	21.0	20.4	21.4	21.8
x=4H y=6H	20.2	21.2	20.6	21.6	22.3	20.5	21.5	21.0	21.9	22.3
x=4H y=8H	20.2	21.1	20.6	21.5	22.2	20.5	21.4	21.0	21.9	22.2
x=4H y=12H	20.2	21.0	20.6	21.4	22.2	20.5	21.4	21.0	21.8	22.2
x=8H y=4H	20.4	21.3	20.8	21.7	22.3	20.6	21.5	21.0	21.9	22.3
x=8H y=6H	20.9	21.7	21.4	22.1	22.8	21.2	21.9	21.7	22.4	22.8
x=8H y=8H	21.0	21.6	21.4	22.0	22.8	21.2	21.8	21.7	22.3	22.8
x=8H y=12H	20.9	21.5	21.4	21.9	22.7	21.2	21.8	21.7	22.2	22.7
x=12H y=4H	20.4	21.2	20.9	21.6	22.2	20.6	21.4	21.0	21.8	22.2
x=12H y=6H	21.0	21.6	21.4	22.1	22.8	21.2	21.8	21.7	22.3	22.8
x=12H y=8H	21.0	21.6	21.5	22.0	22.8	21.2	21.8	21.7	22.3	22.8

Luminaire
Code DE-0228-NEG
Name Colgante BELLE 60W E27
Measurem.
Code DE-0228-NEG
Name Colgante BELLE 60W E27

Luminaire Flux	247.50 lm	Luminaire Power	42.00 W	Efficacy	5.89 lm/W	Efficiency	39.29%
Lamps Flux	630.00 lm	Maximum value	93.31 cd/klm	Position	C=90.00 G=65.00	CG	Double Symmetrical

Diam=360mm

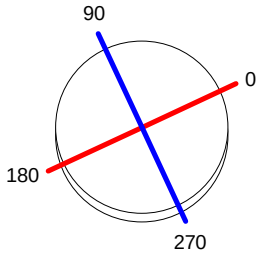

C Halfplanes

180.0 0.0
270.0 90.0



Luminaire
Code DE-0228-NEG
Name Colgante BELLE 60W E27
Measurem.
Code DE-0228-NEG
Name Colgante BELLE 60W E27

Luminaire Flux	247.50 lm	Luminaire Power	42.00 W	Efficacy	5.89 lm/W	Efficiency	39.29%
Lamps Flux	630.00 lm	Maximum value	93.31 cd/klm	Position	C=90.00 G=65.00	CG	Double Symmetrical

Luminance

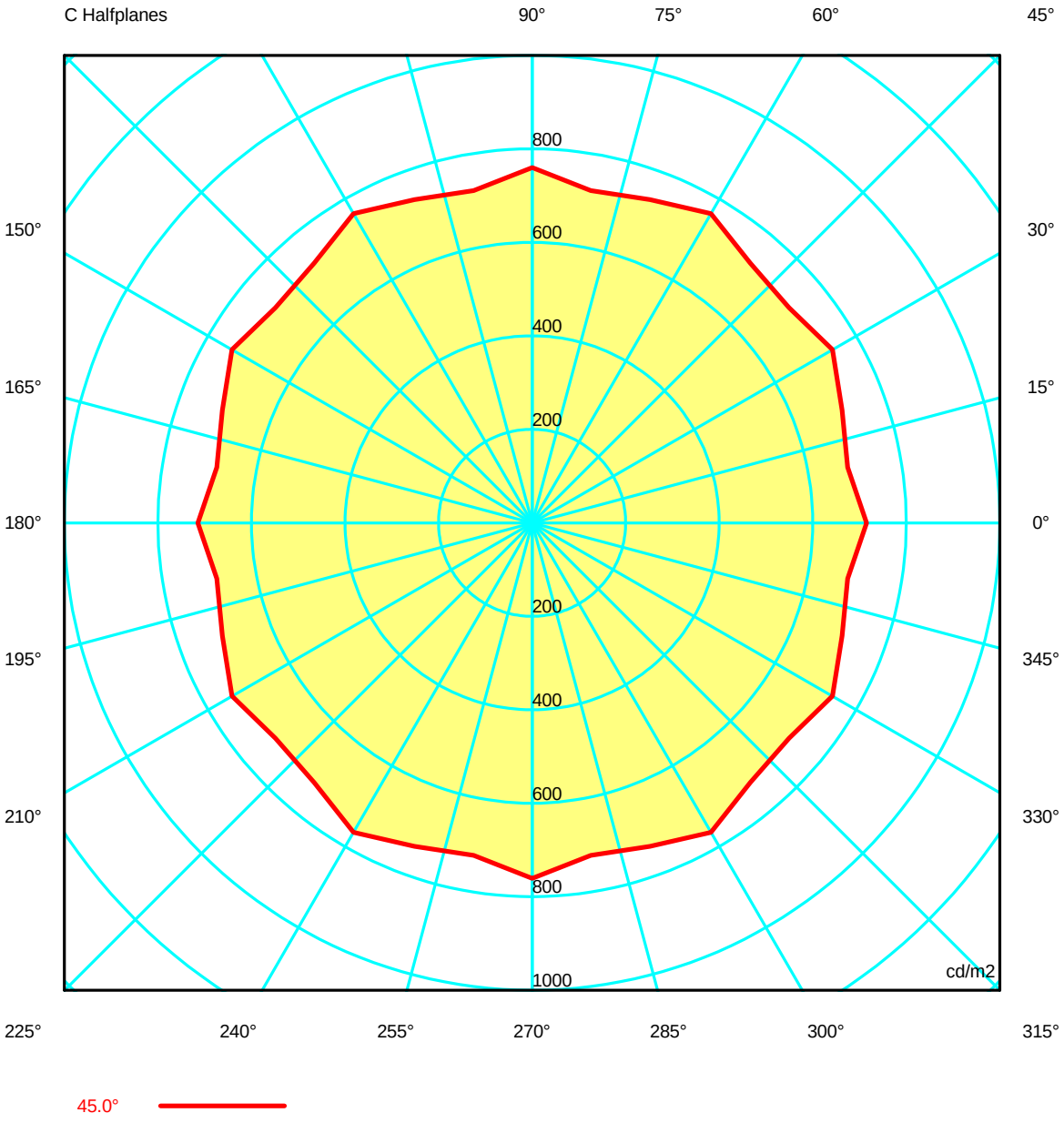

Luminaire
Code DE-0228-NEG
Name Colgante BELLE 60W E27
Measurem.
Code DE-0228-NEG
Name Colgante BELLE 60W E27

Luminaire Flux	247.50 lm	Luminaire Power	42.00 W	Efficacy	5.89 lm/W	Efficiency	39.29%
Lamps Flux	630.00 lm	Maximum value	93.31 cd/klm	Position	C=90.00 G=65.00	CG	Double Symmetrical

Luminance cd/m2 **Table 1/3**

	C 0.00	C 10.00	C 20.00	C 30.00	C 40.00	C 50.00	C 60.00	C 70.00	C 80.00	C 90.00	C 100.00	C 110.00	C 120.00
G 0.0	389.52	389.52	389.52	389.52	389.52	389.52	389.52	389.52	389.52	389.52	389.52	389.52	389.52
G 5.0	389.40	389.59	390.28	391.58	391.81	391.94	391.91	391.65	391.72	392.29	391.72	391.65	391.91
G 10.0	393.33	394.03	395.83	398.64	398.54	398.62	399.73	400.95	401.33	401.34	401.33	400.95	399.73
G 15.0	394.80	396.15	399.74	403.90	405.14	407.78	411.70	411.95	412.52	413.41	412.52	411.95	411.70
G 20.0	404.40	406.87	411.11	415.89	418.87	424.59	430.58	429.40	428.43	431.35	428.43	429.40	430.58
G 25.0	413.94	405.24	410.35	418.84	410.04	416.04	432.30	421.58	414.82	427.02	414.82	421.58	432.30
G 30.0	493.06	485.33	497.39	513.14	502.15	515.29	543.93	527.71	517.71	538.68	517.71	527.71	543.93
G 35.0	570.97	553.11	564.45	585.89	576.18	592.35	625.42	606.94	592.48	610.10	592.48	606.94	625.42
G 40.0	639.41	617.86	633.25	660.73	646.31	659.56	693.77	671.25	658.46	686.99	658.46	671.25	693.77
G 45.0	715.13	684.64	705.00	741.11	716.79	725.41	764.17	736.21	722.24	760.16	722.24	736.21	764.17
G 50.0	783.39	746.45	773.37	818.56	783.97	787.45	831.96	802.44	787.41	829.48	787.41	802.44	831.96
G 55.0	751.15	704.97	743.15	795.70	726.54	732.90	805.93	742.85	720.75	818.42	720.75	742.85	805.93
G 60.0	1051.85	1012.79	1054.15	1111.44	1053.34	1044.53	1097.74	1064.26	1053.94	1118.53	1053.94	1064.26	1097.74
G 65.0	1314.47	1257.42	1312.84	1392.59	1314.86	1303.40	1376.46	1332.40	1318.74	1405.38	1318.74	1332.40	1376.46
G 70.0	1611.73	1539.66	1613.00	1717.58	1617.61	1600.57	1694.35	1644.09	1627.76	1731.66	1627.76	1644.09	1694.35
G 75.0	1681.75	1738.97	1891.76	2018.22	1916.34	1905.66	2016.72	1966.86	1917.31	1908.29	1917.31	1966.86	2016.72
G 80.0	558.73	618.63	786.01	1030.69	932.00	879.69	873.75	867.49	779.42	514.67	779.42	867.49	873.75
G 85.0	123.92	140.23	167.49	187.15	172.44	177.19	202.53	194.85	173.71	156.55	173.71	194.85	202.53
G 90.0	0.00	0.00	0.00	0.00	0.00	0.00	0.00	0.00	0.00	0.00	0.00	0.00	0.00

Luminaire
Code DE-0228-NEG
Name Colgante BELLE 60W E27
Measurem.
Code DE-0228-NEG
Name Colgante BELLE 60W E27

Luminaire Flux	247.50 lm	Luminaire Power	42.00 W	Efficacy	5.89 lm/W	Efficiency	39.29%
Lamps Flux	630.00 lm	Maximum value	93.31 cd/klm	Position	C=90.00 G=65.00	CG	Double Symmetrical

Luminance cd/m2 **Table 2/3**

	C 130.00	C 140.00	C 150.00	C 160.00	C 170.00	C 180.00	C 190.00	C 200.00	C 210.00	C 220.00	C 230.00	C 240.00	C 250.00
G 0.0	389.52	389.52	389.52	389.52	389.52	389.52	389.52	389.52	389.52	389.52	389.52	389.52	389.52
G 5.0	391.94	391.81	391.58	390.28	389.59	389.40	389.59	390.28	391.58	391.81	391.94	391.91	391.65
G 10.0	398.62	398.54	398.64	395.83	394.03	393.33	394.03	395.83	398.64	398.54	398.62	399.73	400.95
G 15.0	407.78	405.14	403.90	399.74	396.15	394.80	396.15	399.74	403.90	405.14	407.78	411.70	411.95
G 20.0	424.59	418.87	415.89	411.11	406.87	404.40	406.87	411.11	415.89	418.87	424.59	430.58	429.40
G 25.0	416.04	410.04	418.84	410.35	405.24	413.94	405.24	410.35	418.84	410.04	416.04	432.30	421.58
G 30.0	515.29	502.15	513.14	497.39	485.33	493.06	485.33	497.39	513.14	502.15	515.29	543.93	527.71
G 35.0	592.35	576.18	585.89	564.45	553.11	570.97	553.11	564.45	585.89	576.18	592.35	625.42	606.94
G 40.0	659.56	646.31	660.73	633.25	617.86	639.41	617.86	633.25	660.73	646.31	659.56	693.77	671.25
G 45.0	725.41	716.79	741.11	705.00	684.64	715.13	684.64	705.00	741.11	716.79	725.41	764.17	736.21
G 50.0	787.45	783.97	818.56	773.37	746.45	783.39	746.45	773.37	818.56	783.97	787.45	831.96	802.44
G 55.0	732.90	726.54	795.70	743.15	704.97	751.15	704.97	743.15	795.70	726.54	732.90	805.93	742.85
G 60.0	1044.53	1053.34	1111.44	1054.15	1012.79	1051.85	1012.79	1054.15	1111.44	1053.34	1044.53	1097.74	1064.26
G 65.0	1303.40	1314.86	1392.59	1312.84	1257.42	1314.47	1257.42	1312.84	1392.59	1314.86	1303.40	1376.46	1332.40
G 70.0	1600.57	1617.61	1717.58	1613.00	1539.66	1611.73	1539.66	1613.00	1717.58	1617.61	1600.57	1694.35	1644.09
G 75.0	1905.66	1916.34	2018.22	1891.76	1738.97	1681.75	1738.97	1891.76	2018.22	1916.34	1905.66	2016.72	1966.86
G 80.0	879.69	932.00	1030.69	786.01	618.63	558.73	618.63	786.01	1030.69	932.00	879.69	873.75	867.49
G 85.0	177.19	172.44	187.15	167.49	140.23	123.92	140.23	167.49	187.15	172.44	177.19	202.53	194.85
G 90.0	0.00	0.00	0.00	0.00	0.00	0.00	0.00	0.00	0.00	0.00	0.00	0.00	0.00

Luminaire
Code DE-0228-NEG
Name Colgante BELLE 60W E27
Measurem.
Code DE-0228-NEG
Name Colgante BELLE 60W E27

Luminaire Flux	247.50 lm	Luminaire Power	42.00 W	Efficacy	5.89 lm/W	Efficiency 39.29%
Lamps Flux	630.00 lm	Maximum value	93.31 cd/klm	Position	C=90.00 G=65.00	CG Double Symmetrical

Luminance cd/m2 **Table 3/3**

	C 260.00	C 270.00	C 280.00	C 290.00	C 300.00	C 310.00	C 320.00	C 330.00	C 340.00	C 350.00
G 0.0	389.52	389.52	389.52	389.52	389.52	389.52	389.52	389.52	389.52	389.52
G 5.0	391.72	392.29	391.72	391.65	391.91	391.94	391.81	391.58	390.28	389.59
G 10.0	401.33	401.34	401.33	400.95	399.73	398.62	398.54	398.64	395.83	394.03
G 15.0	412.52	413.41	412.52	411.95	411.70	407.78	405.14	403.90	399.74	396.15
G 20.0	428.43	431.35	428.43	429.40	430.58	424.59	418.87	415.89	411.11	406.87
G 25.0	414.82	427.02	414.82	421.58	432.30	416.04	410.04	418.84	410.35	405.24
G 30.0	517.71	538.68	517.71	527.71	543.93	515.29	502.15	513.14	497.39	485.33
G 35.0	592.48	610.10	592.48	606.94	625.42	592.35	576.18	585.89	564.45	553.11
G 40.0	658.46	686.99	658.46	671.25	693.77	659.56	646.31	660.73	633.25	617.86
G 45.0	722.24	760.16	722.24	736.21	764.17	725.41	716.79	741.11	705.00	684.64
G 50.0	787.41	829.48	787.41	802.44	831.96	787.45	783.97	818.56	773.37	746.45
G 55.0	720.75	818.42	720.75	742.85	805.93	732.90	726.54	795.70	743.15	704.97
G 60.0	1053.94	1118.53	1053.94	1064.26	1097.74	1044.53	1053.34	1111.44	1054.15	1012.79
G 65.0	1318.74	1405.38	1318.74	1332.40	1376.46	1303.40	1314.86	1392.59	1312.84	1257.42
G 70.0	1627.76	1731.66	1627.76	1644.09	1694.35	1600.57	1617.61	1717.58	1613.00	1539.66
G 75.0	1917.31	1908.29	1917.31	1966.86	2016.72	1905.66	1916.34	2018.22	1891.76	1738.97
G 80.0	779.42	514.67	779.42	867.49	873.75	879.69	932.00	1030.69	786.01	618.63
G 85.0	173.71	156.55	173.71	194.85	202.53	177.19	172.44	187.15	167.49	140.23
G 90.0	0.00	0.00	0.00	0.00	0.00	0.00	0.00	0.00	0.00	0.00

Luminaire
Code DE-0228-NEG
Name Colgante BELLE 60W E27
Measurem.
Code DE-0228-NEG
Name Colgante BELLE 60W E27

Luminaire Flux	247.50 lm	Luminaire Power	42.00 W	Efficacy	5.89 lm/W	Efficiency	39.29%
Lamps Flux	630.00 lm	Maximum value	93.31 cd/klm	Position	C=90.00 G=65.00	CG	Double Symmetrical

PERCENTAGE ISOCANDLES

Projection: Equal Area SLI (glare) 9.8 Tight Tilting Angle:0°

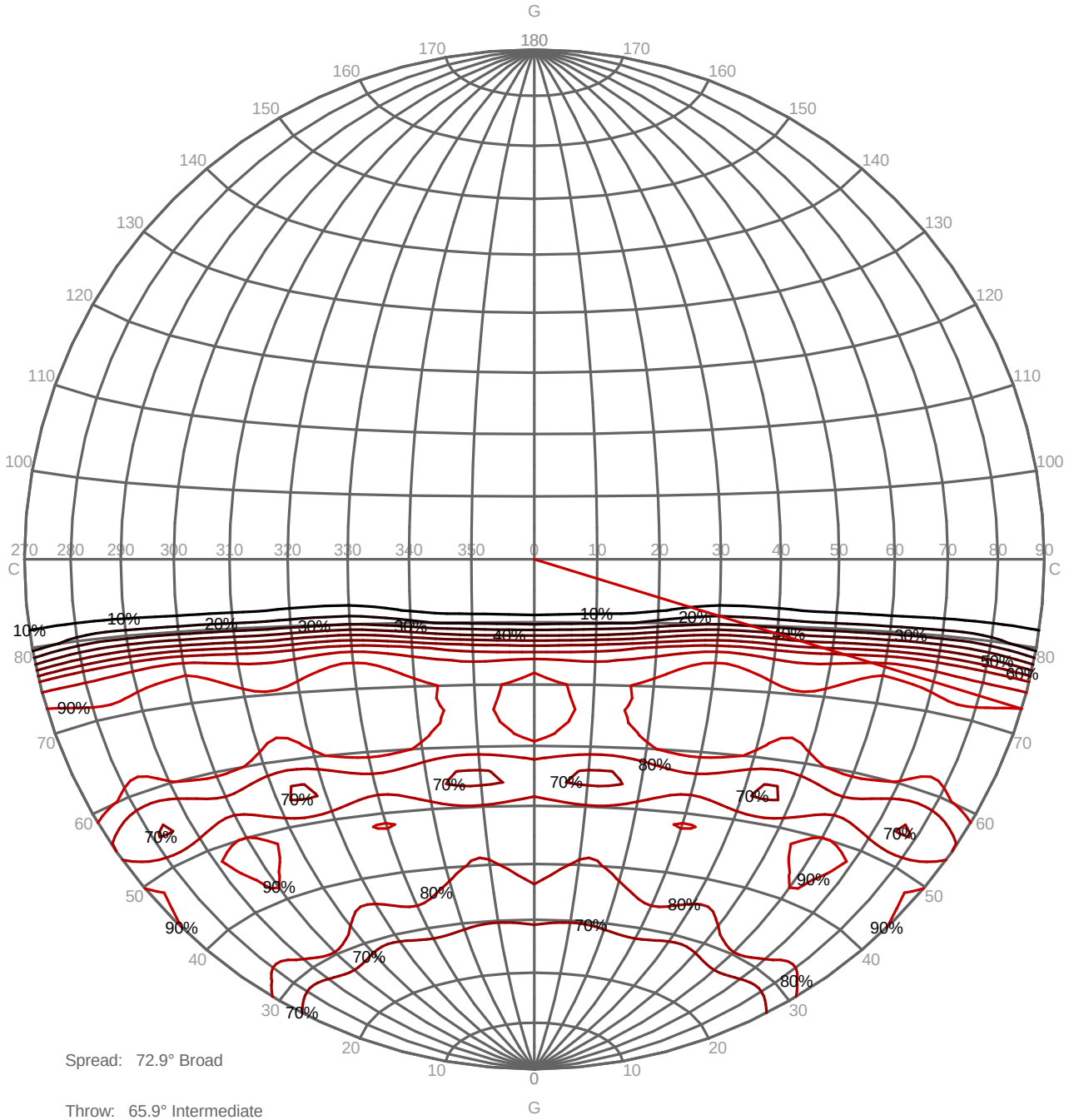

Spread: 72.9° Broad

Throw: 65.9° Intermediate

Luminaire
Code DE-0228-NEG
Name Colgante BELLE 60W E27
Measurem.
Code DE-0228-NEG
Name Colgante BELLE 60W E27

Luminaire Flux	247.50 lm	Luminaire Power	42.00 W	Efficacy	5.89 lm/W	Efficiency	39.29%
Lamps Flux	630.00 lm	Maximum value	93.31 cd/klm	Position	C=90.00 G=65.00	CG	Double Symmetrical

Isolux (Floor)

Luminaire position X=0.00m Y=0.00m Z=2.50m

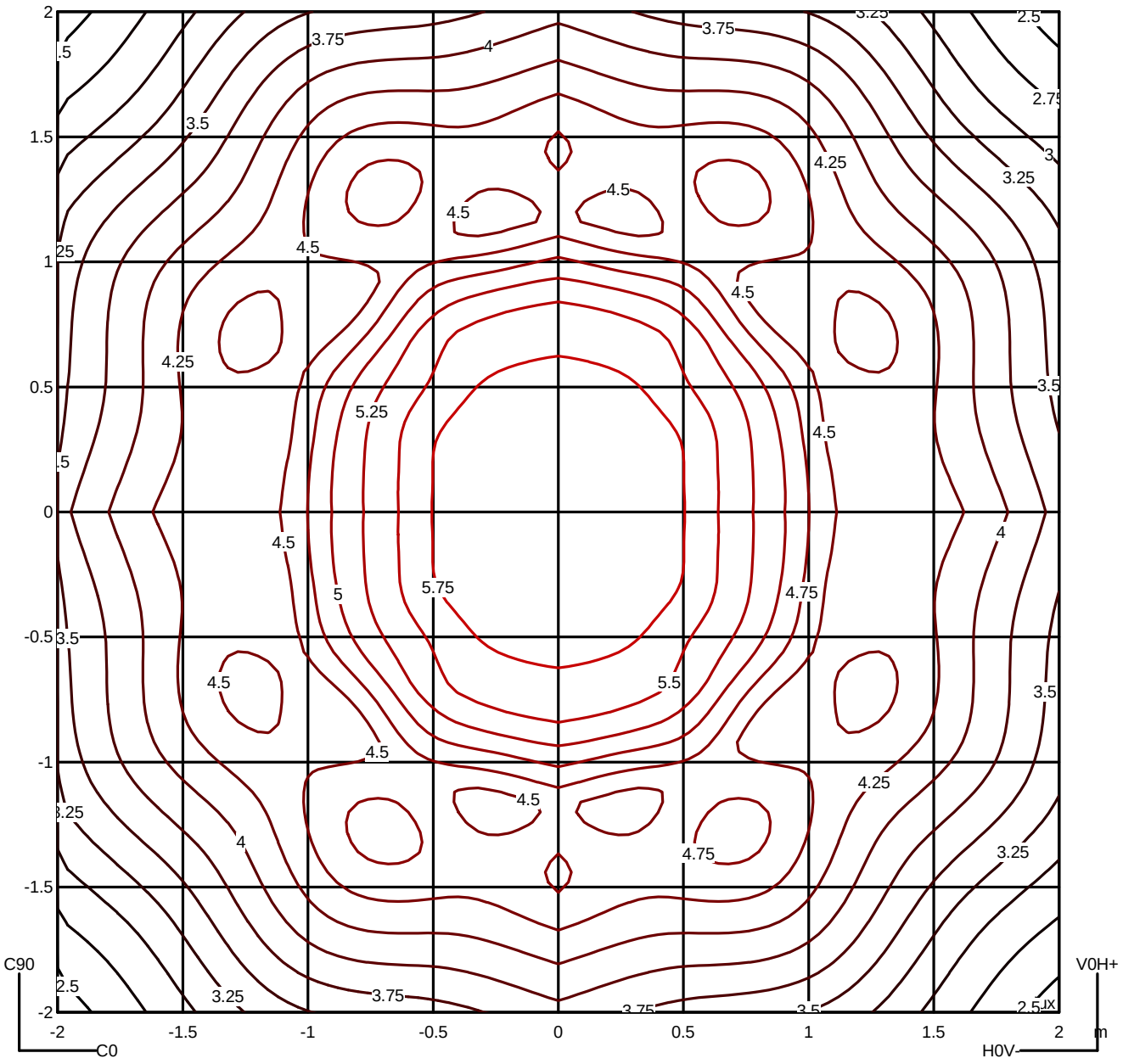

Luminaire
Code DE-0228-NEG
Name Colgante BELLE 60W E27
Measurem.
Code DE-0228-NEG
Name Colgante BELLE 60W E27

Luminaire Flux	247.50 lm	Luminaire Power	42.00 W	Efficacy	5.89 lm/W	Efficiency	39.29%
Lamps Flux	630.00 lm	Maximum value	93.31 cd/klm	Position	C=90.00 G=65.00	CG	Double Symmetrical

Average Luminance [cd/m²]

	45°	50°	55°	60°	65°	70°	75°	80°	85°	
0.0°	715	783	751	1052	1314	1612	1682	559	124	---
90.0°	760	829	818	1119	1405	1732	1908	515	157	---

Flush mounted or longitudinal view

		Illumination(lx)										
A	A	2000	1000	750	500		<300					1.15
B	1		2000	1500	1000	750	500	<300				1.5
C					2000		1000	500	<300			1.85
D	2						2000	1000	500	<300		2.2
E	3							2000	1000	500	<300	2.55

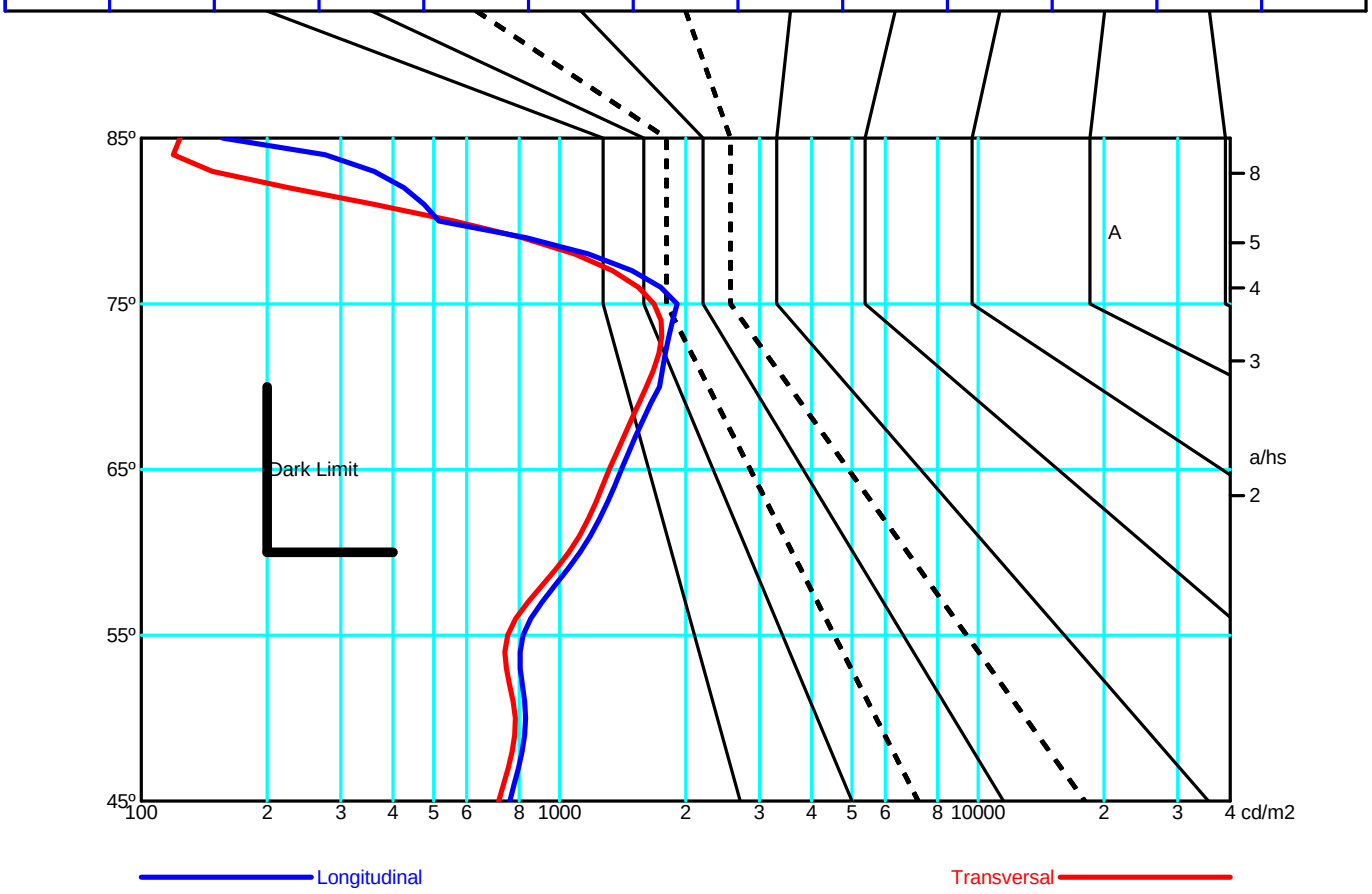

DE-0228

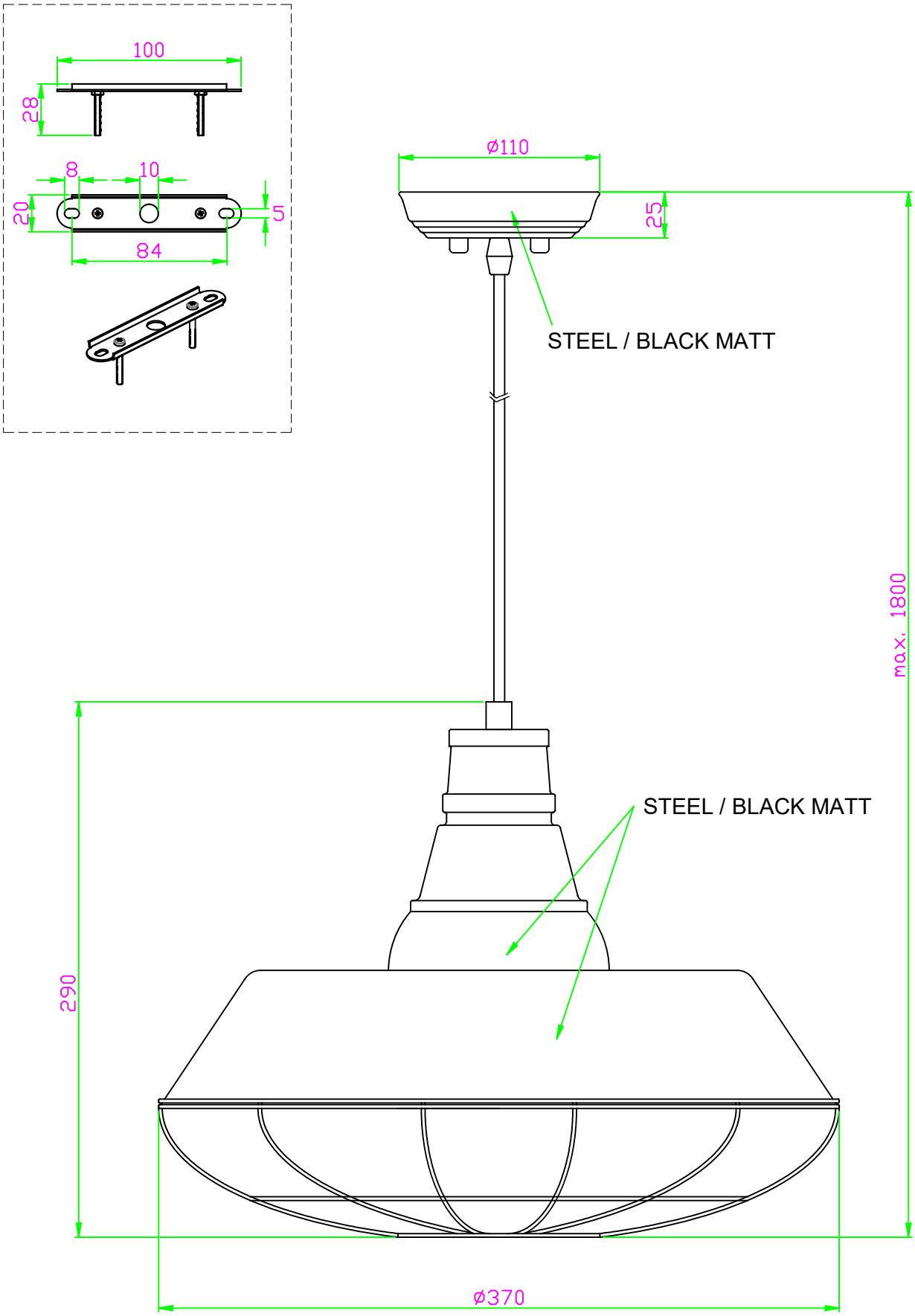

24-05-16

DE-0228

1

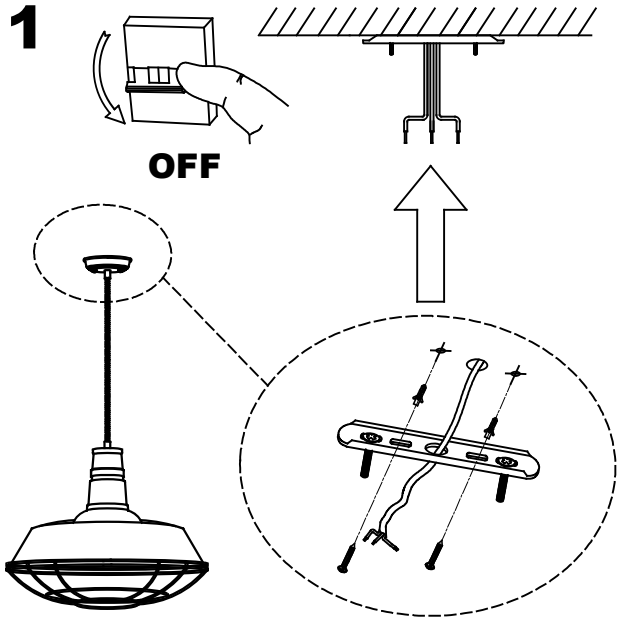

2

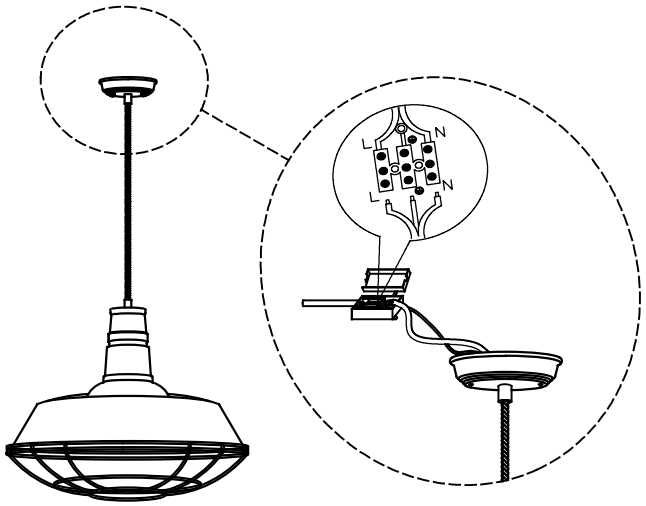

3

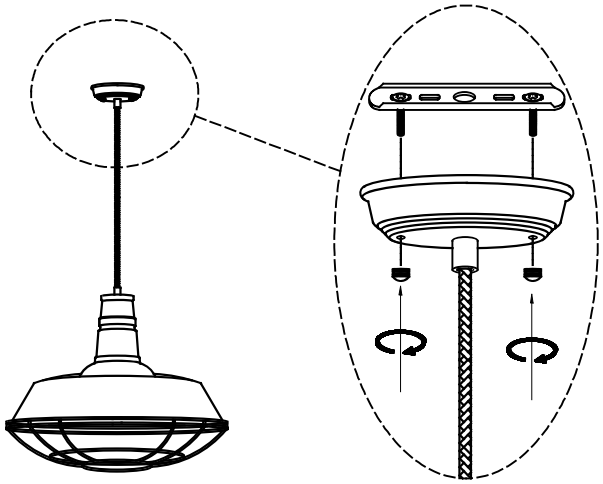

4

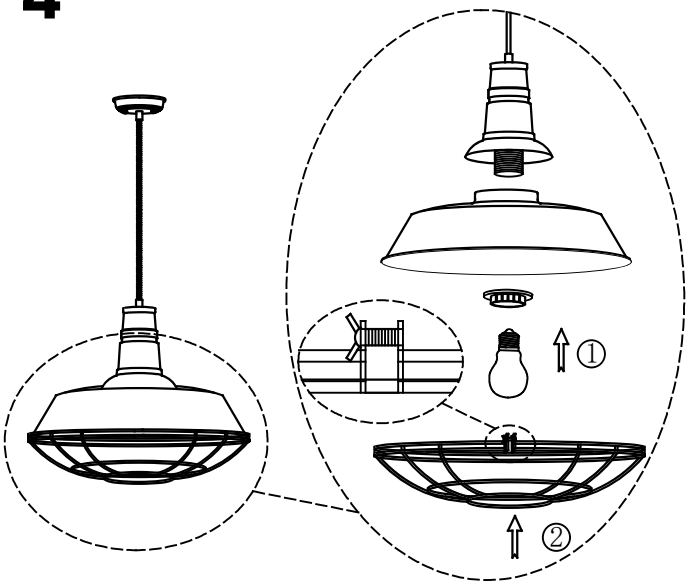

5

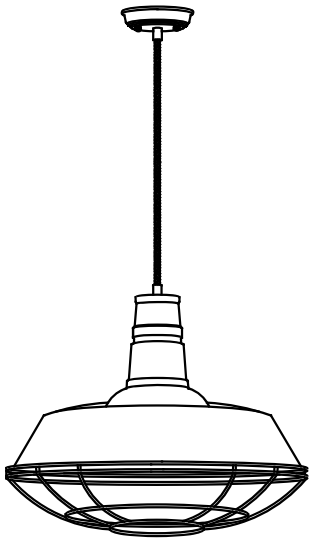

ON



20-05-16