Installation Instructions

Kubo Double Emission PX-0141-NEG

LedsC4 Team

Surface-mounted wall light IP44 Kubo Double Emission GU10 16W Black



TECHNICAL FEATURES

IP44 IK10

Luminaire total power : 16W

Structure material : Polycarbonate + ABS

Structure finish : Black

Diffuser material : Polycarbonate

Diffuser finish : Transparent

Max. size of light bulb : 55/50 mm

Recommended light bulb : GU10

Voltage / frequency : 100-240V ~ 50/60Hz

Warranty : 5 Years

Corrosion resistance (Neutral Salt Spray test according to ISO 9227) : Yes

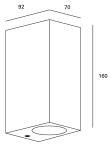

LUMINOTECHNIC FEATURES

Lampholder	Quantity	Light source power (W)	Correlated Colour Temperature (CCT)
GU10	2	Max. power 8W	-

LOGISTICS

Net weight (kg): 0.29

Packaged weight (kg): 0.36

Packaging: 80mm x 170mm x 100mm

20 Un

LIGHT APPLICATION

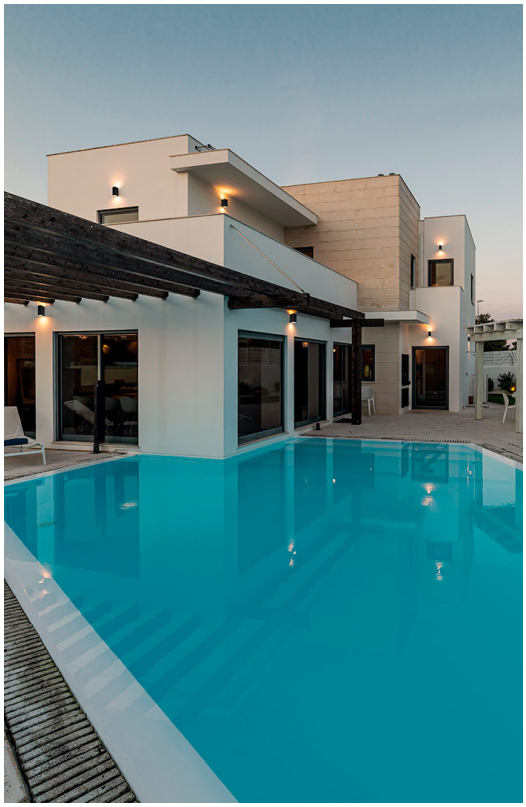

Image may not match reference. LEDS C4 reserves the right to amend any of the product's components. The data related to flux, power and colour temperature are subject to a tolerance of ±10%.

Kubo

PX-0141

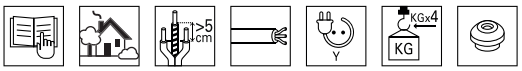

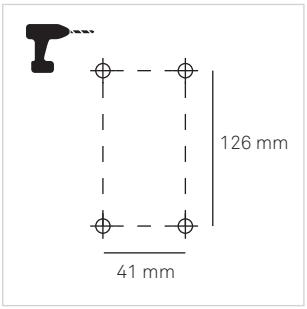

1

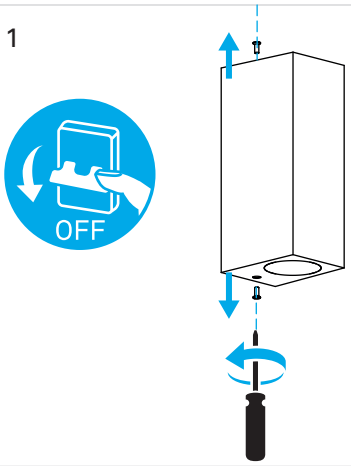

2

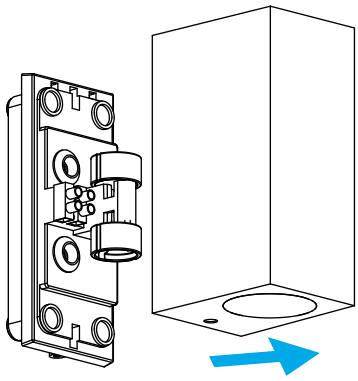

3

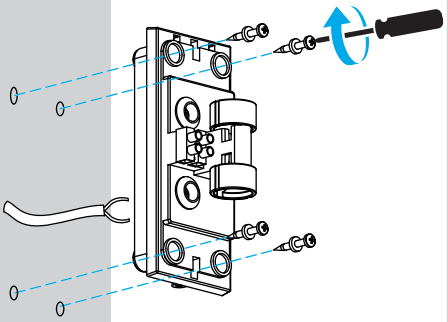

4

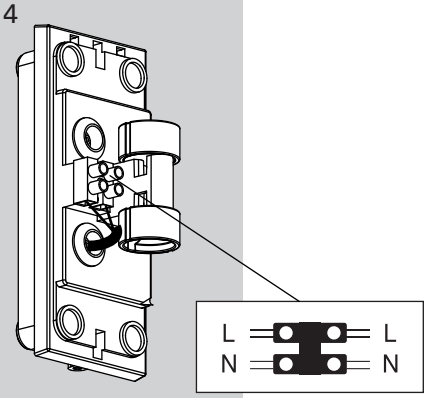

5

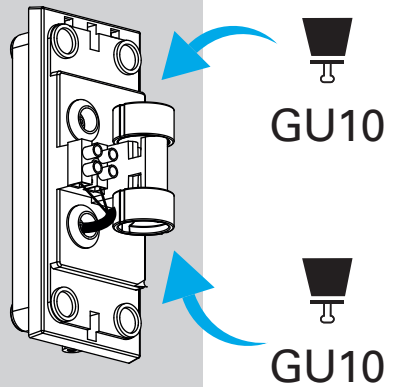

6

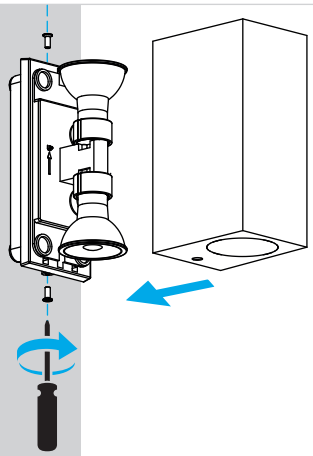

7

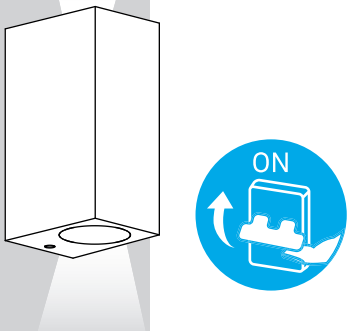

09-12-2021