Corande

LedsC4 Team

PX-0147-NEG

Surface-mounted wall light IP44 Corande E27 15W Black



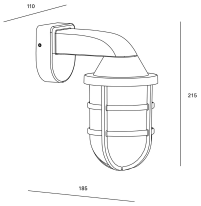

TECHNICAL FEATURES

IP44 IK10

Luminaire total power : 15W

Structure material : Polycarbonate + ABS

Structure finish : Black

Diffuser material : Polycarbonate

Diffuser finish : Transparent

Max. size of light bulb : 100/85 mm

Recommended light bulb : E27

Voltage / frequency : 100-240V ~ 50/60Hz

Warranty : 2 Years

Corrosion resistance (Neutral Salt Spray test according to ISO 9227) : No

LUMINOTECHNIC FEATURES

Lampholder	Quantity	Light source power (W)	Correlated Colour Temperature (CCT)
E27	1	Max. power 15W	-

LOGISTICS

Net weight (kg): 0.36

Packaged weight (kg): 0.46

Packaging: 190mm x 115mm x 220mm

8 Un

LIGHT APPLICATION



Image may not match reference. LEDS C4 reserves the right to amend any of the product's components. The data related to flux, power and colour temperature are subject to a tolerance of ±10%.

Corande

PX-0147

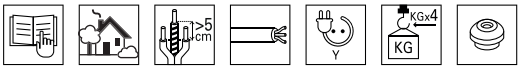

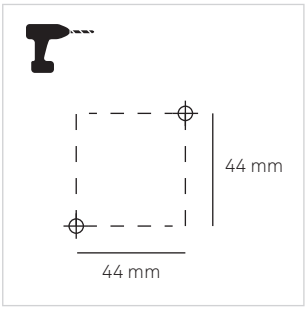

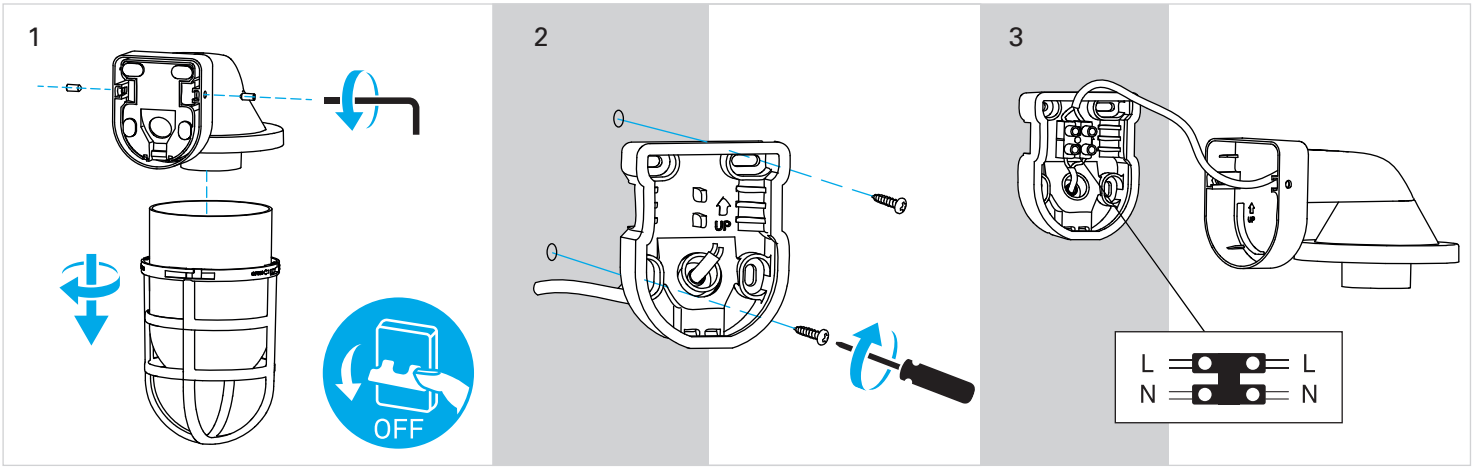

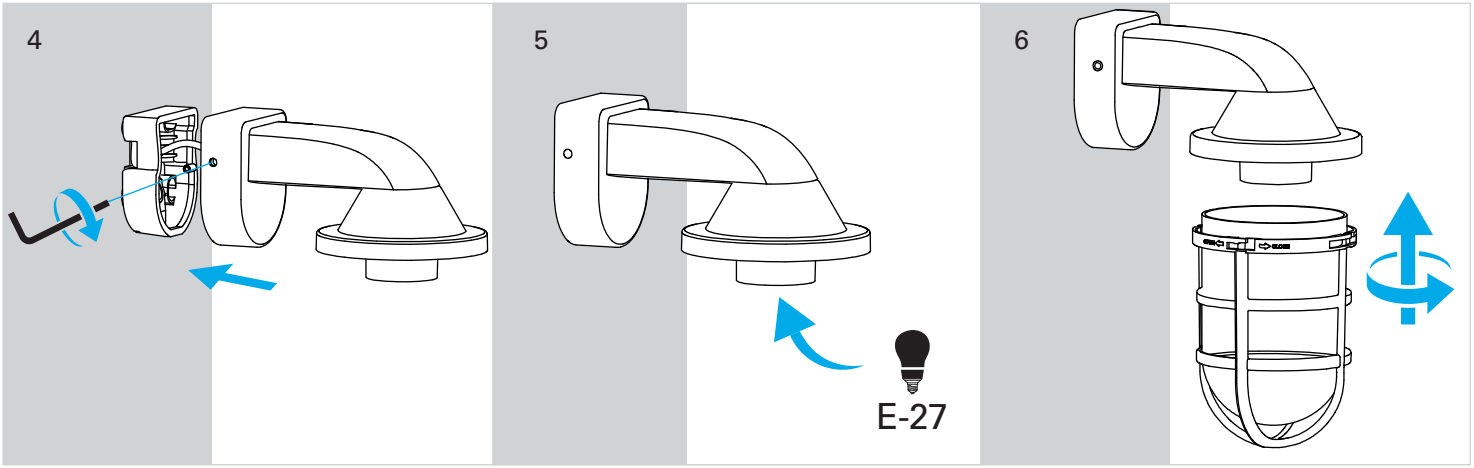

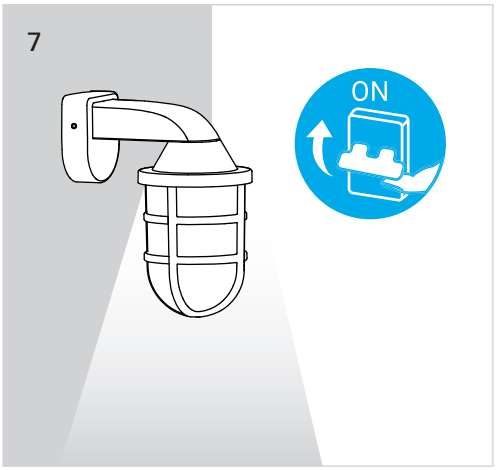

13-10-2021