Propper 1500mm

PX-0222-GRI

Surface-mounted ceiling light IP65 Propper 1500mm LED 54W 4000K ON-OFF Grey 4851lm



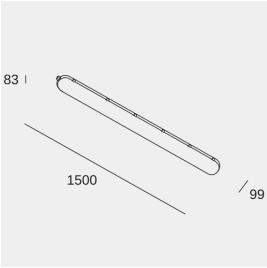

TECHNICAL FEATURES

IP65 IK10

Luminaire total power : 56.7W

Real lumens : 4851

Nominal lumens : 5500

Real lm/W : 86

Lens / reflector angle : HORIZONTAL 119º

Structure material : Polycarbonate, Stainless steel AISI202

Structure finish : Grey

Diffuser material : Polycarbonate

Diffuser finish : Transparent

Voltage / frequency : 100-240V ~ 50/60Hz

Dimming protocol : ON-OFF

Power Factor : 0.90

Useful life : 36.000h L70B30

Warranty : 3 Years

Corrosion resistance (Neutral Salt Spray test according to ISO 9227) : Yes

LUMINOTECHNIC FEATURES

CRI: 80

MacAdam steps: 3

Photobiological risk: RG1

Lampholder	Quantity	Light source power (W)	Correlated Colour Temperature (CCT)
LED	1	54W	4000K

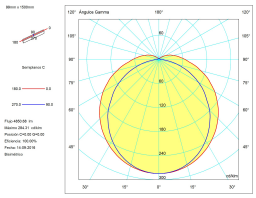

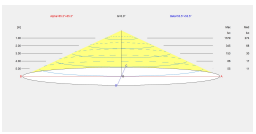

LOGISTICS

Net weight (kg): 1.6

Packaged weight (kg): 2

Packaging: 100mm x 75mm x 1515mm

8 Un

LIGHT APPLICATION

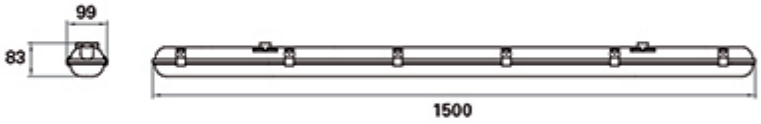

Image may not match reference. LEDS C4 reserves the right to amend any of the product's components. The data related to flux, power and colour temperature are subject to a tolerance of ±10%.

LEDS C4

Luminaire
Code PX-0222-GRI
Name PROPPER
Measurem.
Code PX-0222-GRI
Name PROPPER

Luminaire Flux	4850.68 lm	Luminaire Power	58.00 W	Efficacy	83.63 lm/W	Efficiency	100.00%
Sources Flux	4850.68 lm	Maximum value	284.31 cd/klm	Position	C=0.00 G=0.00	CG	Double Symmetrical

Rectangular Luminaire	Length 99 mm		Width 1500 mm		Height 83 mm
Rectangular Luminous Area	Length 99 mm		Width 1500 mm		Height 30 mm
Horizontal Luminous Area	0.148500 m2		Emitting area on Plane 180°		0.002970 m2
Emitting area on Plane 0°	0.002970 m2		Emitting area on Plane 270°		0.045000 m2
Emitting area on Plane 90°	0.045000 m2		Glare area at 76°		0.038807 m2
Coordinate system	CG		Symmetry Type		Double Symmetrical
Date	14-09-2016		Maximum Gamma Angle		180
Measurement Distance	0.00		Measurement Flux		4850.68 lm
Operator	Asselum T2		Rated Voltage		
Temperature	25.00 °C		Rated Current		
Humidity	60.00 %		Photocell		
Notes					

Luminaire Lamps

Line	Code	Name	Flux [lm]	Pow. [W]	Q.ty
	PX-0222-GRI	PX-0222-GRI	4850.68	58.00	1

C.I.E.	42 71 90 92 100	D DIN 5040	A31
F UTE	0.92 G + 0.08 T	B NBN	BZ 5

99mm x 1500mm

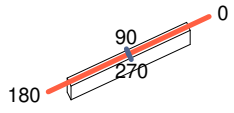

C Halfplanes
180.0 0.0
270.0 90.0

ULOR 8.40 %
DLOR 91.60 %
RN 8.40 %

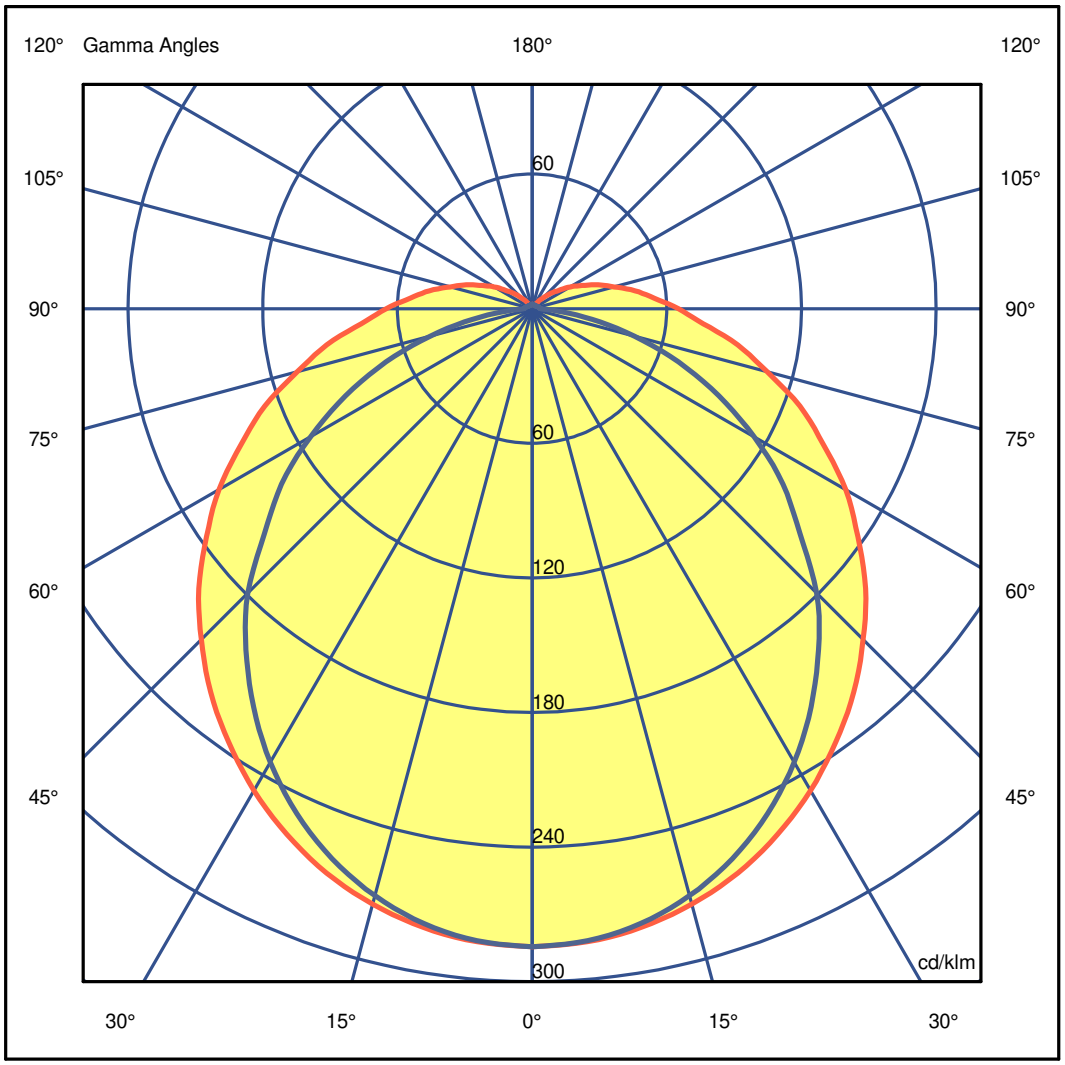

LEDS C4

Luminaire
Code PX-0222-GRI
Name PROPPER
Measurem.
Code PX-0222-GRI
Name PROPPER

Luminaire Flux	4850.68 lm	Luminaire Power	58.00 W	Efficacy	83.63 lm/W	Efficiency	100.00%
Sources Flux	4850.68 lm	Maximum value	284.31 cd/klm	Position	C=0.00 G=0.00	CG	Double Symmetrical

Luminous Intensity Table cd/klm **Table 1/1**

	C 0.00	C 15.00	C 30.00	C 45.00	C 60.00	C 75.00	C 90.00
G 0.0	284.31	284.31	284.31	284.31	284.31	284.31	284.31
G 5.0	283.19	283.11	283.12	283.02	282.87	282.72	282.70
G 10.0	279.99	279.86	279.72	279.10	278.72	278.38	278.24
G 15.0	274.69	274.47	273.81	272.78	272.28	271.10	270.84
G 20.0	267.72	267.08	266.57	264.23	262.47	261.21	260.80
G 25.0	258.54	258.02	256.10	253.36	251.77	248.84	248.22
G 30.0	247.96	247.67	245.34	240.62	236.96	234.40	233.35
G 35.0	235.75	234.61	231.06	226.90	222.55	217.92	216.57
G 40.0	222.96	222.33	217.85	210.46	204.26	199.71	198.38
G 45.0	208.50	206.65	201.27	194.29	187.46	180.06	179.14
G 50.0	193.89	192.40	185.93	175.84	166.20	159.83	155.74
G 55.0	177.09	174.93	167.54	158.16	146.47	138.47	136.42
G 60.0	161.22	158.26	150.03	140.25	127.58	119.02	114.10
G 65.0	143.12	140.97	133.22	121.93	107.60	95.48	91.74
G 70.0	126.89	124.08	115.98	103.88	88.96	76.13	69.36
G 75.0	108.23	106.12	98.23	86.38	70.97	55.40	47.21
G 80.0	92.98	90.39	82.49	70.04	54.25	38.15	27.03
G 85.0	76.53	74.61	67.15	55.66	40.26	23.14	11.04
G 90.0	65.14	63.00	55.75	44.26	29.55	13.94	3.95
G 95.0	54.56	52.59	46.00	35.80	22.58	8.77	3.39
G100.0	46.45	44.57	38.42	28.60	16.56	5.87	3.15
G105.0	37.82	36.22	30.72	22.37	12.26	3.85	2.90
G110.0	31.26	29.81	24.82	17.16	8.58	2.82	2.69
G115.0	24.57	23.28	19.03	12.79	5.94	2.48	2.46
G120.0	19.54	18.39	14.67	9.19	3.81	2.28	2.29
G125.0	14.32	13.47	10.42	6.20	2.53	2.12	2.12
G130.0	10.65	9.88	7.41	3.89	2.11	1.99	2.01
G135.0	6.92	6.36	4.47	2.42	2.00	1.91	1.91
G140.0	4.42	4.00	2.77	2.03	1.90	1.86	1.87
G145.0	2.48	2.31	2.11	1.95	1.86	1.84	1.87
G150.0	2.11	2.08	2.04	1.90	1.84	1.84	1.88
G155.0	2.01	1.97	1.98	1.87	1.85	1.84	1.87
G160.0	1.93	1.92	1.97	1.88	1.87	1.88	1.91
G165.0	1.93	1.91	1.98	1.90	1.91	1.93	1.95
G170.0	1.95	1.92	2.00	1.93	1.95	1.98	1.99
G175.0	1.94	1.93	2.02	1.96	1.98	2.00	2.02
G180.0	1.96	1.96	2.04	1.99	2.00	2.02	2.03

LEDS C4

Luminaire
Code PX-0222-GRI
Name PROPPER
Measurem.
Code PX-0222-GRI
Name PROPPER

Luminaire Flux	4850.68 lm	Luminaire Power	58.00 W	Efficacy	83.63 lm/W	Efficiency	100.00%
Sources Flux	4850.68 lm	Maximum value	284.31 cd/klm	Position	C=0.00 G=0.00	CG	Double Symmetrical

99mm x 1500mm

C Halfplanes

180.0 — 0.0

270.0 — 90.0

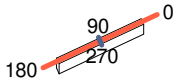

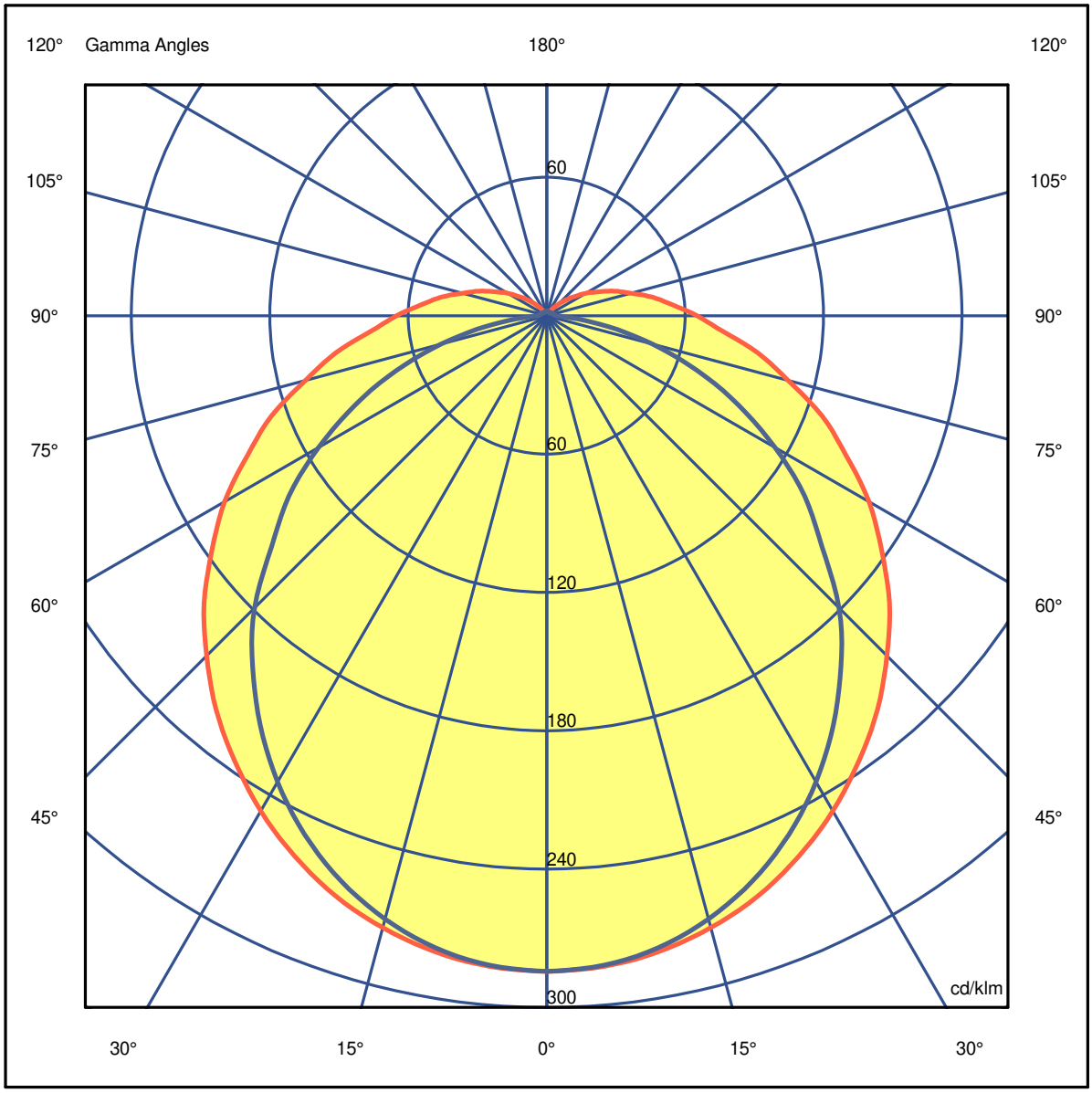

LEDS C4

Luminaire
Code PX-0222-GRI
Name PROPPER
Measurem.
Code PX-0222-GRI
Name PROPPER

Luminaire Flux	4850.68 lm	Luminaire Power	58.00 W	Efficacy	83.63 lm/W	Efficiency	100.00%
Sources Flux	4850.68 lm	Maximum value	284.31 cd/klm	Position	C=0.00 G=0.00	CG	Double Symmetrical

99mm x 1500mm

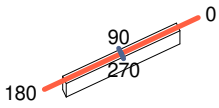

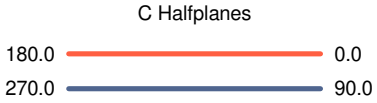

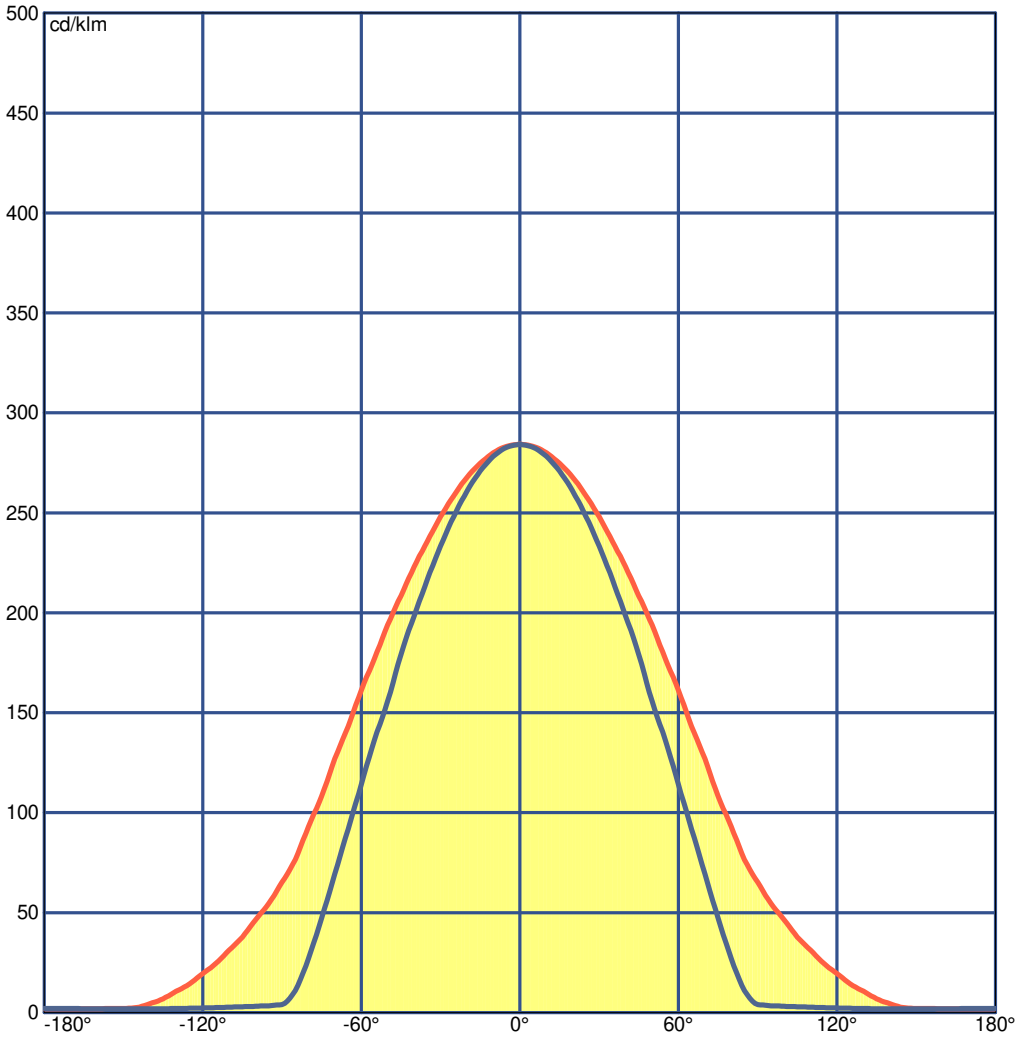

LEDS C4

Luminaire
Code PX-0222-GRI
Name PROPPER
Measurem.
Code PX-0222-GRI
Name PROPPER

Luminaire Flux	4850.68 lm	Luminaire Power	58.00 W	Efficacy	83.63 lm/W	Efficiency	100.00%
Sources Flux	4850.68 lm	Maximum value	284.31 cd/klm	Position	C=0.00 G=0.00	CG	Double Symmetrical

UGR
S = 0.250

Reflectancies										
Ceiling/Cavity	0.7	0.7	0.5	0.5	0.3	0.7	0.7	0.5	0.5	0.3
Walls	0.5	0.3	0.5	0.3	0.3	0.5	0.3	0.5	0.3	0.3
WorkingPlane	0.2	0.2	0.2	0.2	0.2	0.2	0.2	0.2	0.2	0.2
RoomDimensions	Viewed Crosswise					Viewed Endwise				
x=2H y=2H	19.7	21.0	20.1	21.3	21.8	17.5	18.8	17.9	19.2	19.6
x=2H y=3H	22.0	23.2	22.5	23.6	24.1	18.8	19.9	19.2	20.4	20.8
x=2H y=4H	23.2	24.4	23.7	24.8	25.2	19.2	20.3	19.7	20.8	21.2
x=2H y=6H	24.5	25.5	25.0	26.0	26.5	19.5	20.5	20.0	21.0	21.4
x=2H y=8H	25.2	26.2	25.7	26.6	27.1	19.5	20.5	20.0	21.0	21.5
x=2H y=12H	25.9	26.9	26.4	27.3	27.9	19.5	20.5	20.0	21.0	21.5
x=4H y=2H	20.2	21.3	20.7	21.8	22.2	18.6	19.7	19.1	20.1	20.6
x=4H y=3H	22.8	23.7	23.3	24.2	24.7	20.1	21.0	20.6	21.5	22.0
x=4H y=4H	24.1	25.0	24.6	25.5	26.0	20.6	21.5	21.2	22.0	22.5
x=4H y=6H	25.6	26.3	26.1	26.8	27.4	21.0	21.8	21.6	22.3	22.9
x=4H y=8H	26.3	27.0	26.9	27.6	28.2	21.1	21.8	21.7	22.4	23.0
x=4H y=12H	27.2	27.8	27.8	28.4	29.0	21.2	21.8	21.7	22.4	23.0
x=8H y=4H	24.4	25.0	24.9	25.6	26.2	21.5	22.1	22.0	22.7	23.3
x=8H y=6H	26.0	26.6	26.6	27.2	27.8	22.0	22.6	22.6	23.2	23.8
x=8H y=8H	26.9	27.4	27.5	28.0	28.7	22.3	22.8	22.9	23.4	24.0
x=8H y=12H	27.9	28.4	28.6	29.0	29.7	22.4	22.8	23.0	23.4	24.1
x=12H y=4H	24.4	25.0	24.9	25.5	26.2	21.7	22.3	22.2	22.9	23.5
x=12H y=6H	26.1	26.6	26.7	27.2	27.8	22.4	22.9	23.0	23.5	24.2
x=12H y=8H	27.0	27.5	27.7	28.1	28.8	22.7	23.2	23.3	23.8	24.4

LEDS C4

Luminaire
Code PX-0222-GRI
Name PROPPER
Measurem.
Code PX-0222-GRI
Name PROPPER

Luminaire Flux	4850.68 lm	Luminaire Power	58.00 W	Efficacy	83.63 lm/W	Efficiency	100.00%
Sources Flux	4850.68 lm	Maximum value	284.31 cd/klm	Position	C=0.00 G=0.00	CG	Double Symmetrical

Total Flux=4850.68 Luminaire Flux=4850.68

RI	0.60	0.80	1.00	1.25	1.50	2.00	2.50	3.00	4.00	5.00	10.00	20.00
DRR	0.27	0.35	0.42	0.48	0.54	0.62	0.68	0.72	0.78	0.81	0.89	0.94
RC	6	6	6	6	6	6	6	6	6	6	7	7

Zonal Flux per 1000 Lumen

Y°	10	20	30	40	50	60	70	80	90	100	110	120	130	140	150	160	170	180
ZF(Y)	27	104	221	363	512	653	772	859	916	952	974	987	994	997	998	999	1000	1000

CIE Flux Codes
42 71 90 92 100

C.I.E.	6/6/6/6/6/6/6/6/6/7/7	LOR	100.00000 %
D DIN 5040	A31	ULOR	8.39976 %
F UTE	0.92 G + 0.08 T	DLOR	91.60023 %
B NBN	BZ 5	UFF	8.39977 %
RN	8.39977 %	DFF	91.60023 %
BLF	1.0	FFR	9.17003 %

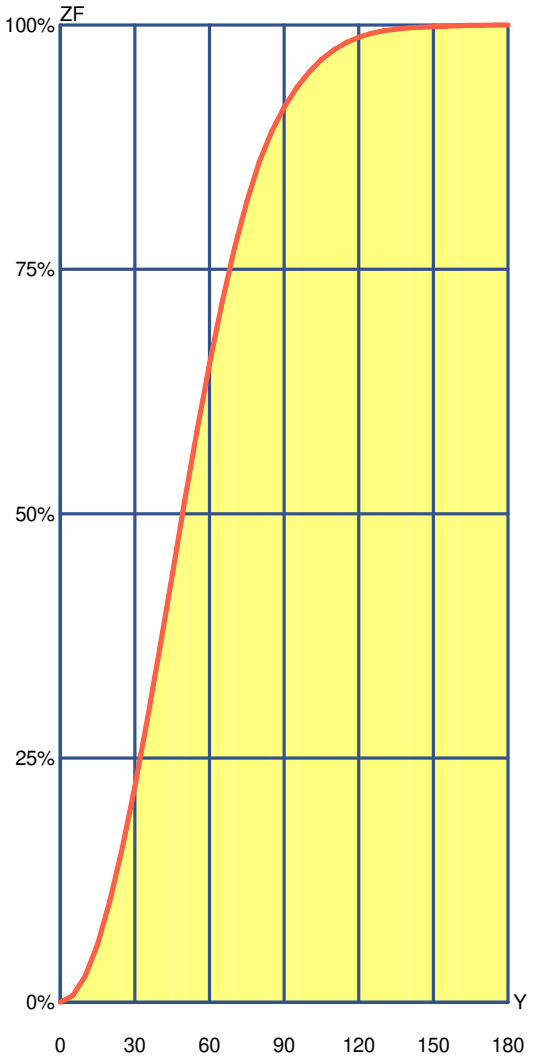

Zonal Flux				
Gamma °	Flux	Sum lm	Flux [%]	Sum [%]
0°	0.00	0.00	0.00%	0.00 %
5°	6.78	6.78	0.68 %	0.68 %
10°	20.11	26.89	2.01 %	2.69 %
15°	32.75	59.64	3.27 %	5.96 %
20°	44.27	103.91	4.43 %	10.39 %
25°	54.32	158.22	5.43 %	15.82 %
30°	62.58	220.80	6.26 %	22.08 %
35°	68.84	289.64	6.88 %	28.96 %
40°	72.98	362.62	7.30 %	36.26 %
45°	74.95	437.57	7.50 %	43.76 %
50°	74.72	512.29	7.47 %	51.23 %
55°	72.38	584.67	7.24 %	58.47 %
60°	68.39	653.06	6.84 %	65.31 %
65°	62.78	715.84	6.28 %	71.58 %
70°	55.87	771.70	5.59 %	77.17 %
75°	48.01	819.71	4.80 %	81.97 %
80°	39.70	859.40	3.97 %	85.94 %
85°	31.70	891.10	3.17 %	89.11 %
90°	24.90	916.00	2.49 %	91.60 %
95°	19.89	935.89	1.99 %	93.59 %
100°	16.01	951.90	1.60 %	95.19 %
105°	12.69	964.59	1.27 %	96.46 %
110°	9.84	974.43	0.98 %	97.44 %
115°	7.48	981.91	0.75 %	98.19 %
120°	5.52	987.43	0.55 %	98.74 %
125°	3.94	991.37	0.39 %	99.14 %
130°	2.70	994.07	0.27 %	99.41 %
135°	1.79	995.86	0.18 %	99.59 %
140°	1.15	997.01	0.12 %	99.70 %
145°	0.78	997.79	0.08 %	99.78 %
150°	0.59	998.38	0.06 %	99.84 %
155°	0.49	998.87	0.05 %	99.89 %
160°	0.40	999.27	0.04 %	99.93 %
165°	0.32	999.58	0.03 %	99.96 %
170°	0.23	999.81	0.02 %	99.98 %
175°	0.14	999.95	0.01 %	100.00 %
180°	0.05	1000.00	0.00 %	100.00 %

LEDS C4

Luminaire
Code PX-0222-GRI
Name PROPPER
Measurem.
Code PX-0222-GRI
Name PROPPER

Luminaire Flux	4850.68 lm	Luminaire Power	58.00 W	Efficacy	83.63 lm/W	Efficiency	100.00%
Sources Flux	4850.68 lm	Maximum value	284.31 cd/klm	Position	C=0.00 G=0.00	CG	Double Symmetrical

Utilizations CIE

Mounting Direct Normalization Normalised Suspension Ratio 1/3 Standard CIE Settings

Ceiling

K	8873	8773	8871	8771	7773	7771	7753	7553	7751	7551	7731	7331	7711	7111	5551	5531	5331	5511	5111	3331	3311	1111	0000
0.60	278	249	235	212	237	202	164	139	142	121	102	77	72	49	113	82	72	59	47	69	50	43	31
0.80	318	291	253	234	277	223	197	173	161	142	117	93	83	61	132	97	88	70	58	83	60	53	37
1.00	344	320	260	244	305	233	224	199	173	155	127	105	92	71	145	108	99	79	68	94	70	62	42
1.25	368	346	262	249	329	239	250	227	181	166	137	117	102	81	156	119	111	89	78	105	79	72	47
1.50	384	365	261	250	347	240	271	249	187	173	144	126	109	90	163	127	119	97	86	114	88	80	50
2.00	405	389	254	246	371	238	302	282	192	181	154	138	121	104	171	139	132	110	100	126	101	93	56
2.50	418	405	248	241	386	234	324	306	194	185	160	146	130	115	176	146	140	120	111	135	111	104	60
3.00	427	415	242	237	397	230	340	324	195	187	164	152	137	123	179	152	146	127	119	141	119	112	63
4.00	439	430	234	230	411	225	363	350	196	190	170	161	147	135	182	159	155	138	131	150	130	123	67
5.00	446	439	229	226	420	221	379	368	196	192	174	166	153	144	184	164	161	145	139	155	138	132	70
10.00	461	457	214	213	438	209	413	407	195	193	182	177	169	163	187	174	172	163	159	168	157	151	76
20.00	467	465	204	204	447	201	433	430	193	192	185	183	178	175	187	180	179	173	171	174	168	163	80

Wall

K	8873	8773	8871	8771	7773	7771	7753	7553	7751	7551	7731	7331	7711	7111	5551	5531	5331	5511	5111	3331	3311	1111	0000
0.60	468	452	414	402	444	396	350	339	320	310	268	258	231	223	306	259	256	225	221	254	222	219	200
0.80	534	518	460	449	506	441	412	399	368	358	316	305	276	267	351	305	301	270	265	298	265	261	239
1.00	581	565	490	480	551	470	459	445	402	392	351	340	311	301	383	339	334	304	298	330	298	293	267
1.25	624	610	516	507	592	496	505	491	433	424	385	373	346	335	413	371	367	337	331	360	330	324	295
1.50	658	644	534	526	623	515	541	527	457	449	411	400	374	363	436	397	392	363	358	385	355	348	317
2.00	698	686	552	546	663	534	590	576	486	478	445	435	411	400	464	429	424	399	393	415	389	380	345
2.50	726	716	565	560	690	547	625	612	505	499	469	459	437	427	483	451	448	424	418	437	413	403	365
3.00	746	737	573	569	709	556	651	639	519	513	486	477	457	447	496	468	465	443	438	453	431	420	380
4.00	780	772	591	587	742	575	693	682	544	540	517	509	492	483	522	498	495	476	471	481	462	450	407
5.00	806	799	606	603	768	591	725	716	565	561	541	534	518	510	542	521	518	502	497	504	487	473	428
10.00	876	873	653	652	838	640	811	806	624	621	608	605	594	589	601	588	586	575	572	569	558	542	492
20.00	929	927	692	692	891	680	875	872	671	669	662	659	653	650	648	640	639	633	631	620	614	596	543

Working Pl.

K	8873	8773	8871	8771	7773	7771	7753	7553	7751	7551	7731	7331	7711	7111	5551	5531	5331	5511	5111	3331	3311	1111	0000
0.60	549	533	512	499	523	491	408	397	393	383	326	317	278	271	377	317	313	273	269	311	269	266	248
0.80	652	634	601	588	619	576	502	488	479	468	410	397	358	347	458	396	392	349	344	387	343	339	320
1.00	734	715	669	656	696	642	581	565	549	537	480	466	427	414	524	464	458	416	410	451	408	401	382
1.25	811	793	731	719	769	703	659	641	617	605	550	535	497	483	588	530	524	483	476	515	473	464	444
1.50	870	852	777	766	824	749	720	701	668	657	604	589	552	537	637	582	576	536	529	564	524	513	493
2.00	956	940	842	833	906	814	813	795	745	735	688	673	640	624	711	662	656	621	612	641	605	591	571
2.50	1000	998	883	876	960	856	877	860	796	787	745	731	700	685	760	717	711	679	670	693	660	644	624
3.00	1000	1000	912	906	999	885	924	908	832	824	786	773	745	731	795	756	751	721	713	730	701	682	663
4.00	1000	1000	948	943	1000	922	986	972	878	871	839	828	804	791	840	807	802	777	770	779	753	732	713
5.00	1000	1000	969	965	1000	944	1000	1000	907	901	873	864	842	830	868	840	836	813	807	809	787	764	745
10.00	1000	1000	1000	1000	1000	992	1000	1000	970	967	950	944	930	923	930	913	911	897	892	879	865	836	818
20.00	1000	1000	1000	1000	1000	1000	1000	1000	1000	1000	995	992	984	979	966	956	955	947	945	920	913	880	862

LM53 SHR C0-C180: 1.286 SHR C90-C270: 1.214 SHR Square: 1.396

LEDS C4

Luminaire
Code PX-0222-GRI
Name PROPPER
Measurem.
Code PX-0222-GRI
Name PROPPER

Luminaire Flux	4850.68 lm	Luminaire Power	58.00 W	Efficacy	83.63 lm/W	Efficiency	100.00%
Sources Flux	4850.68 lm	Maximum value	284.31 cd/klm	Position	C=0.00 G=0.00	CG	Double Symmetrical

Width at 50.00 % of Max Intensity

H[m]	1.00	2.00	3.00	4.00	5.00	H[m]	1.00	2.00	3.00	4.00	5.00
OA	2.17	4.35	6.52	8.69	10.87	OC	1.35	2.70	4.06	5.41	6.76
OB	2.17	4.35	6.52	8.69	10.87	OD	1.35	2.70	4.06	5.41	6.76

Luminous Intensities [cd/klm]

	0	5	15	25	35	45	55	65	75	85
OA	1379.09	1373.68	1332.44	1254.08	1143.53	1011.37	859.01	694.21	524.98	371.23
OB	1379.09	1373.68	1332.44	1254.08	1143.53	1011.37	859.01	694.21	524.98	371.23
OC	1379.09	1371.31	1313.77	1204.02	1050.51	868.95	661.74	445.01	228.99	53.56
OD	1379.09	1371.31	1313.77	1204.02	1050.51	868.95	661.74	445.01	228.99	53.56

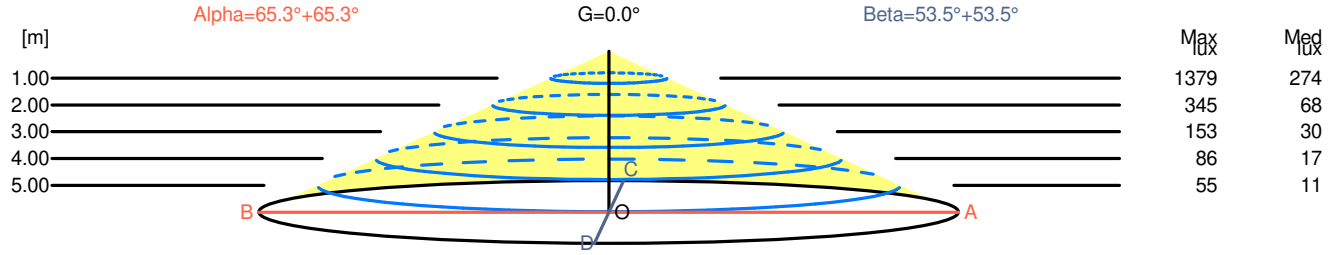

H[m]	D[m]	Max lux	Med lux
1.00	4.35	1379	274
2.00	8.69	345	68
3.00	13.04	153	30
4.00	17.39	86	17
5.00	21.73	55	11

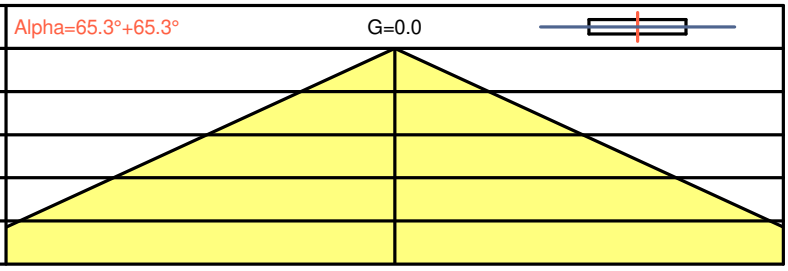

H[m]	D[m]	Max lux	Med lux
1.00	2.70	1379	274
2.00	5.41	345	68
3.00	8.11	153	30
4.00	10.82	86	17
5.00	13.52	55	11

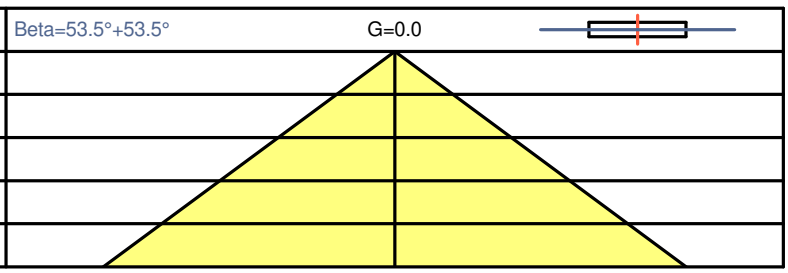

LEDS C4

Luminaire
Code PX-0222-GRI
Name PROPPER
Measurem.
Code PX-0222-GRI
Name PROPPER

Luminaire Flux	4850.68 lm	Luminaire Power	58.00 W	Efficacy	83.63 lm/W	Efficiency	100.00%
Sources Flux	4850.68 lm	Maximum value	284.31 cd/klm	Position	C=0.00 G=0.00	CG	Double Symmetrical

Isolux (Floor)

Luminaire position X=0.00m Y=0.00m Z=2.50m

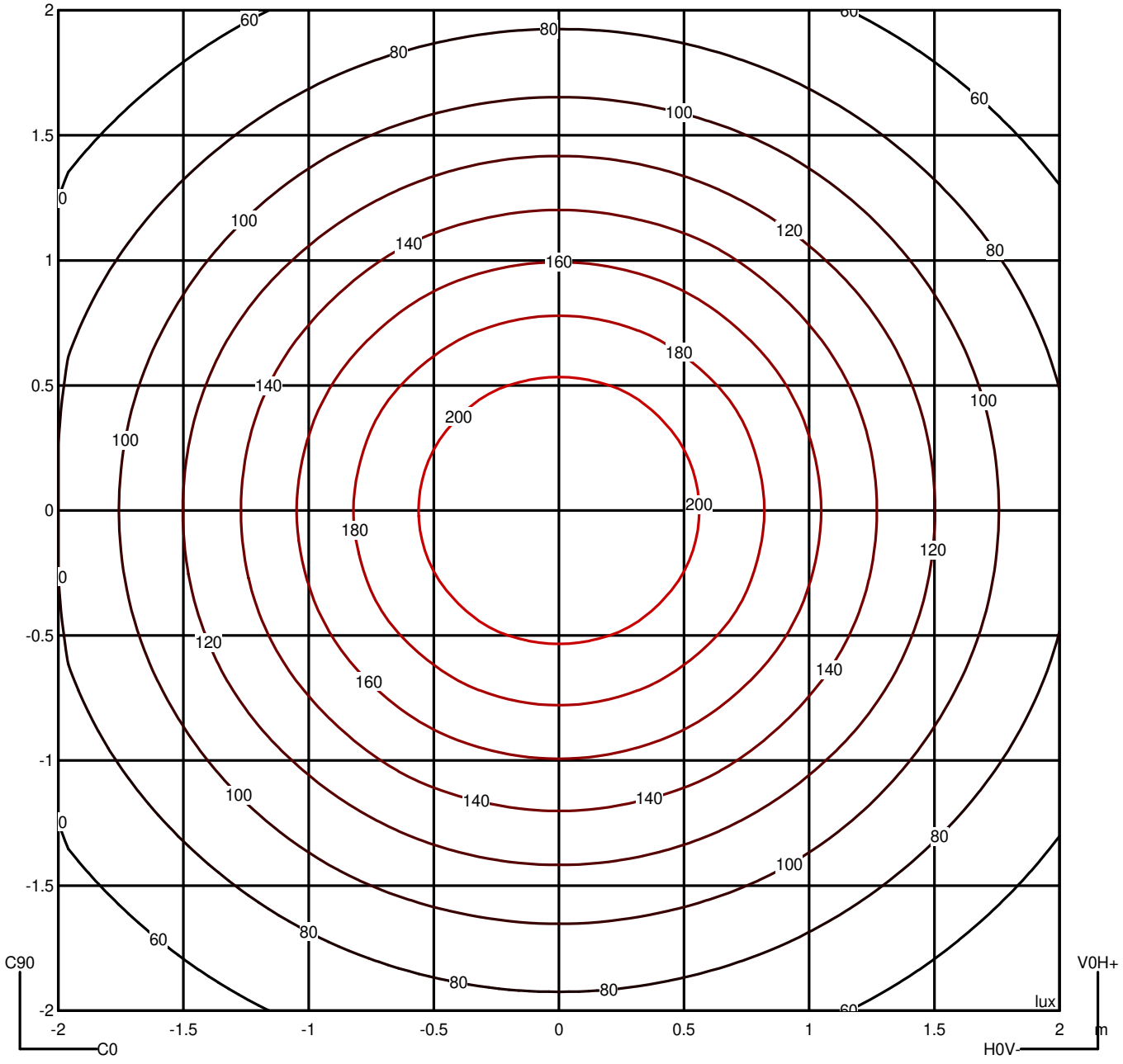

LEDS C4

Luminaire
Code PX-0222-GRI
Name PROPPER
Measurem.
Code PX-0222-GRI
Name PROPPER

Luminaire Flux	4850.68 lm	Luminaire Power	58.00 W	Efficacy	83.63 lm/W	Efficiency	100.00%
Sources Flux	4850.68 lm	Maximum value	284.31 cd/klm	Position	C=0.00 G=0.00	CG	Double Symmetrical

Luminance

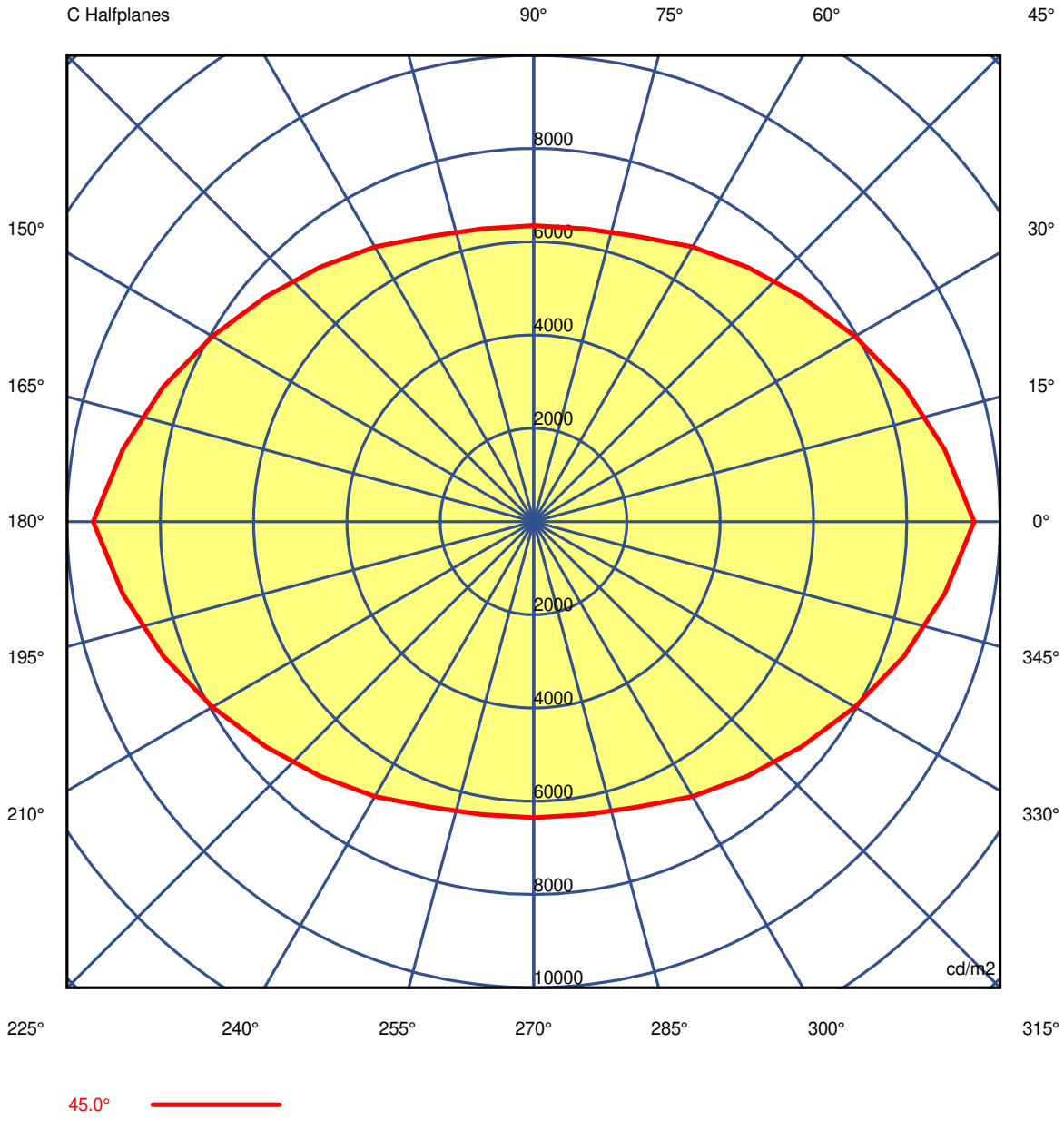

LEDS C4

Luminaire
Code PX-0222-GRI
Name PROPPER
Measurem.
Code PX-0222-GRI
Name PROPPER

Luminaire Flux	4850.68 lm	Luminaire Power	58.00 W	Efficacy	83.63 lm/W	Efficiency	100.00%
Sources Flux	4850.68 lm	Maximum value	284.31 cd/klm	Position	C=0.00 G=0.00	CG	Double Symmetrical

Luminance cd/m2 **Table 1/3**

	C 0.00	C 10.00	C 20.00	C 30.00	C 40.00	C 50.00	C 60.00	C 70.00	C 80.00	C 90.00	C 100.00	C 110.00	C 120.00
G 0.0	9286.82	9286.82	9286.82	9286.82	9286.82	9286.82	9286.82	9286.82	9286.82	9286.82	9286.82	9286.82	9286.82
G 5.0	9269.50	9225.17	9184.74	9148.30	9113.99	9083.69	9059.05	9040.85	9031.52	9030.25	9031.52	9040.85	9059.05
G 10.0	9254.32	9166.74	9085.99	9009.68	8933.39	8868.96	8821.02	8785.16	8764.70	8760.79	8764.70	8785.16	8821.02
G 15.0	9239.66	9108.51	8981.83	8858.70	8742.25	8650.91	8581.15	8514.99	8478.98	8471.20	8478.98	8514.99	8581.15
G 20.0	9239.00	9050.75	8885.63	8729.83	8559.63	8410.70	8300.56	8219.47	8174.29	8165.05	8174.29	8219.47	8300.56
G 25.0	9231.88	9005.56	8781.39	8556.41	8342.78	8177.97	8051.20	7923.42	7855.23	7838.45	7855.23	7923.42	8051.20
G 30.0	9245.82	8970.79	8708.61	8431.88	8147.86	7904.93	7722.86	7589.66	7513.39	7490.81	7513.39	7589.66	7722.86
G 35.0	9270.82	8927.24	8581.37	8239.58	7935.44	7676.45	7452.85	7259.60	7147.77	7124.27	7147.77	7259.60	7452.85
G 40.0	9350.12	8946.30	8558.01	8136.44	7719.48	7363.99	7089.03	6882.57	6769.56	6744.03	6769.56	6882.57	7089.03
G 45.0	9442.77	8942.01	8446.71	7954.54	7504.79	7128.05	6805.58	6511.34	6377.99	6350.84	6377.99	6511.34	6805.58
G 50.0	9623.71	9043.31	8462.92	7865.74	7289.37	6780.40	6375.83	6094.14	5916.44	5814.54	5916.44	6094.14	6375.83
G 55.0	9805.03	9091.99	8383.32	7687.55	7077.56	6510.51	6005.07	5645.96	5463.98	5422.40	5463.98	5645.96	6005.07
G 60.0	10179.91	9275.10	8406.12	7583.59	6889.71	6241.86	5662.81	5265.44	5025.33	4888.16	5025.33	5265.44	5662.81
G 65.0	10606.64	9513.26	8508.23	7559.45	6717.40	5946.38	5249.72	4693.61	4385.66	4297.83	4385.66	4693.61	5249.72
G 70.0	11486.93	9995.22	8716.97	7566.62	6558.66	5654.07	4859.00	4230.33	3828.99	3614.88	3828.99	4230.33	4859.00
G 75.0	12710.43	10664.87	9019.56	7605.16	6417.74	5379.71	4441.57	3624.93	3082.94	2795.92	3082.94	3624.93	4441.57
G 80.0	15709.12	12230.21	9813.05	7926.66	6404.62	5122.88	4009.57	3055.79	2355.51	1870.37	2355.51	3055.79	4009.57
G 85.0	23345.70	15535.28	11361.84	8589.75	6599.80	5025.98	3667.66	2465.29	1564.74	927.15	1564.74	2465.29	3667.66
G 90.0	106384.39	28962.96	16323.20	10785.31	7536.43	5292.13	3543.08	2096.84	1086.70	425.65	1086.70	2096.84	3543.08

LEDS C4

Luminaire
Code PX-0222-GRI
Name PROPPER
Measurem.
Code PX-0222-GRI
Name PROPPER

Luminaire Flux	4850.68 lm	Luminaire Power	58.00 W	Efficacy	83.63 lm/W	Efficiency	100.00%
Sources Flux	4850.68 lm	Maximum value	284.31 cd/klm	Position	C=0.00 G=0.00	CG	Double Symmetrical

Luminance cd/m2 **Table 2/3**

	C 130.00	C 140.00	C 150.00	C 160.00	C 170.00	C 180.00	C 190.00	C 200.00	C 210.00	C 220.00	C 230.00	C 240.00	C 250.00
G 0.0	9286.82	9286.82	9286.82	9286.82	9286.82	9286.82	9286.82	9286.82	9286.82	9286.82	9286.82	9286.82	9286.82
G 5.0	9083.69	9113.99	9148.30	9184.74	9225.17	9269.50	9225.17	9184.74	9148.30	9113.99	9083.69	9059.05	9040.85
G 10.0	8868.96	8933.39	9009.68	9085.99	9166.74	9254.32	9166.74	9085.99	9009.68	8933.39	8868.96	8821.02	8785.16
G 15.0	8650.91	8742.25	8858.70	8981.83	9108.51	9239.66	9108.51	8981.83	8858.70	8742.25	8650.91	8581.15	8514.99
G 20.0	8410.70	8559.63	8729.83	8885.63	9050.75	9239.00	9050.75	8885.63	8729.83	8559.63	8410.70	8300.56	8219.47
G 25.0	8177.97	8342.78	8556.41	8781.39	9005.56	9231.88	9005.56	8781.39	8556.41	8342.78	8177.97	8051.20	7923.42
G 30.0	7904.93	8147.86	8431.88	8708.61	8970.79	9245.82	8970.79	8708.61	8431.88	8147.86	7904.93	7722.86	7589.66
G 35.0	7676.45	7935.44	8239.58	8581.37	8927.24	9270.82	8927.24	8581.37	8239.58	7935.44	7676.45	7452.85	7259.60
G 40.0	7363.99	7719.48	8136.44	8558.01	8946.30	9350.12	8946.30	8558.01	8136.44	7719.48	7363.99	7089.03	6882.57
G 45.0	7128.05	7504.79	7954.54	8446.71	8942.01	9442.77	8942.01	8446.71	7954.54	7504.79	7128.05	6805.58	6511.34
G 50.0	6780.40	7289.37	7865.74	8462.92	9043.31	9623.71	9043.31	8462.92	7865.74	7289.37	6780.40	6375.83	6094.14
G 55.0	6510.51	7077.56	7687.55	8383.32	9091.99	9805.03	9091.99	8383.32	7687.55	7077.56	6510.51	6005.07	5645.96
G 60.0	6241.86	6889.71	7583.59	8406.12	9275.10	10179.91	9275.10	8406.12	7583.59	6889.71	6241.86	5662.81	5265.44
G 65.0	5946.38	6717.40	7559.45	8508.23	9513.26	10606.64	9513.26	8508.23	7559.45	6717.40	5946.38	5249.72	4693.61
G 70.0	5654.07	6558.66	7566.62	8716.97	9995.22	11486.93	9995.22	8716.97	7566.62	6558.66	5654.07	4859.00	4230.33
G 75.0	5379.71	6417.74	7605.16	9019.56	10664.87	12710.43	10664.87	9019.56	7605.16	6417.74	5379.71	4441.57	3624.93
G 80.0	5122.88	6404.62	7926.66	9813.05	12230.21	15709.12	12230.21	9813.05	7926.66	6404.62	5122.88	4009.57	3055.79
G 85.0	5025.98	6599.80	8589.75	11361.84	15535.28	23345.70	15535.28	11361.84	8589.75	6599.80	5025.98	3667.66	2465.29
G 90.0	5292.13	7536.43	10785.31	16323.20	28962.96	106384.39	28962.96	16323.20	10785.31	7536.43	5292.13	3543.08	2096.84

LEDS C4

Luminaire
Code PX-0222-GRI
Name PROPPER
Measurem.
Code PX-0222-GRI
Name PROPPER

Luminaire Flux	4850.68 lm	Luminaire Power	58.00 W	Efficacy	83.63 lm/W	Efficiency 100.00%
Sources Flux	4850.68 lm	Maximum value	284.31 cd/klm	Position	C=0.00 G=0.00	CG Double Symmetrical

Luminance cd/m2 **Table 3/3**

	C 260.00	C 270.00	C 280.00	C 290.00	C 300.00	C 310.00	C 320.00	C 330.00	C 340.00	C 350.00
G 0.0	9286.82	9286.82	9286.82	9286.82	9286.82	9286.82	9286.82	9286.82	9286.82	9286.82
G 5.0	9031.52	9030.25	9031.52	9040.85	9059.05	9083.69	9113.99	9148.30	9184.74	9225.17
G 10.0	8764.70	8760.79	8764.70	8785.16	8821.02	8868.96	8933.39	9009.68	9085.99	9166.74
G 15.0	8478.98	8471.20	8478.98	8514.99	8581.15	8650.91	8742.25	8858.70	8981.83	9108.51
G 20.0	8174.29	8165.05	8174.29	8219.47	8300.56	8410.70	8559.63	8729.83	8885.63	9050.75
G 25.0	7855.23	7838.45	7855.23	7923.42	8051.20	8177.97	8342.78	8556.41	8781.39	9005.56
G 30.0	7513.39	7490.81	7513.39	7589.66	7722.86	7904.93	8147.86	8431.88	8708.61	8970.79
G 35.0	7147.77	7124.27	7147.77	7259.60	7452.85	7676.45	7935.44	8239.58	8581.37	8927.24
G 40.0	6769.56	6744.03	6769.56	6882.57	7089.03	7363.99	7719.48	8136.44	8558.01	8946.30
G 45.0	6377.99	6350.84	6377.99	6511.34	6805.58	7128.05	7504.79	7954.54	8446.71	8942.01
G 50.0	5916.44	5814.54	5916.44	6094.14	6375.83	6780.40	7289.37	7865.74	8462.92	9043.31
G 55.0	5463.98	5422.40	5463.98	5645.96	6005.07	6510.51	7077.56	7687.55	8383.32	9091.99
G 60.0	5025.33	4888.16	5025.33	5265.44	5662.81	6241.86	6889.71	7583.59	8406.12	9275.10
G 65.0	4385.66	4297.83	4385.66	4693.61	5249.72	5946.38	6717.40	7559.45	8508.23	9513.26
G 70.0	3828.99	3614.88	3828.99	4230.33	4859.00	5654.07	6558.66	7566.62	8716.97	9995.22
G 75.0	3082.94	2795.92	3082.94	3624.93	4441.57	5379.71	6417.74	7605.16	9019.56	10664.87
G 80.0	2355.51	1870.37	2355.51	3055.79	4009.57	5122.88	6404.62	7926.66	9813.05	12230.21
G 85.0	1564.74	927.15	1564.74	2465.29	3667.66	5025.98	6599.80	8589.75	11361.84	15535.28
G 90.0	1086.70	425.65	1086.70	2096.84	3543.08	5292.13	7536.43	10785.31	16323.20	28962.96

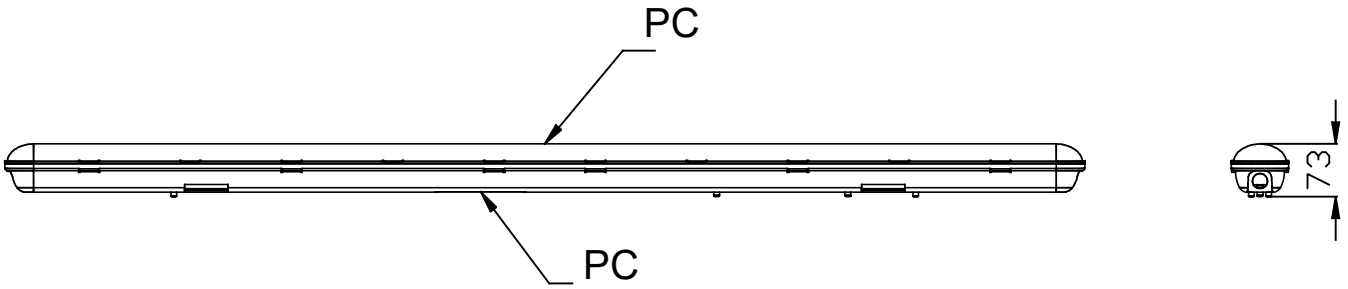
PC
PC
73

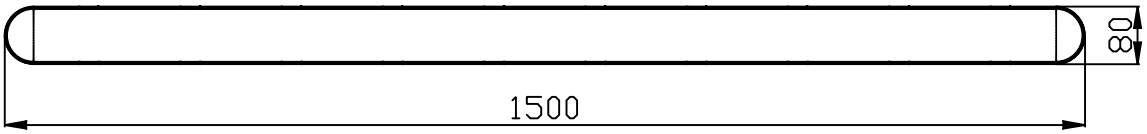
80
1500

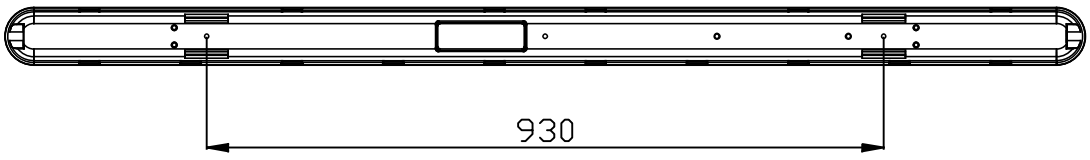
930

PX-0222

①

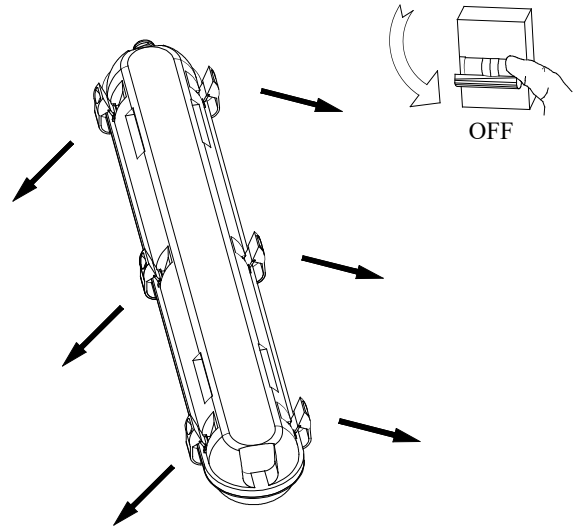

②

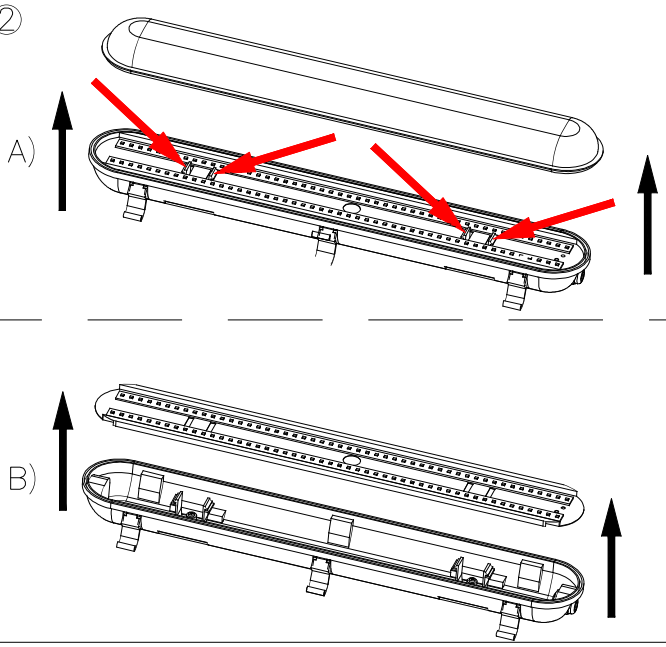

③

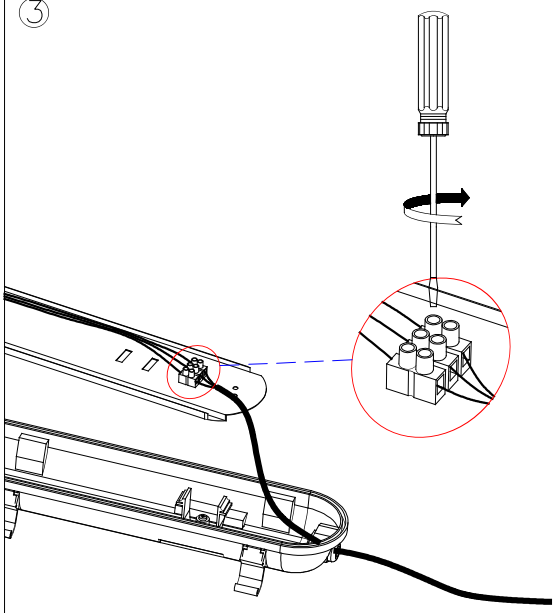

④

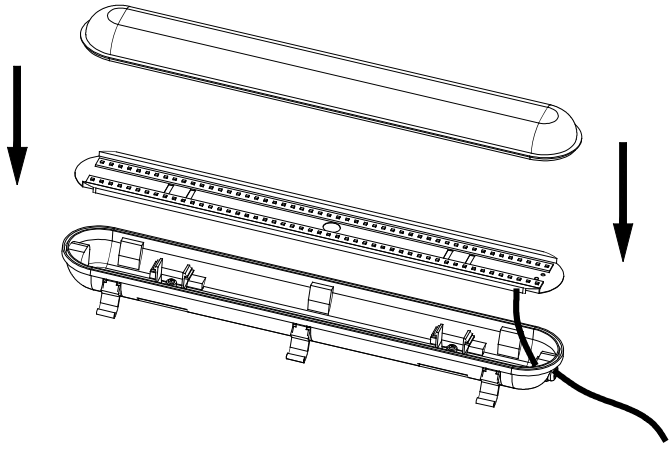

⑤

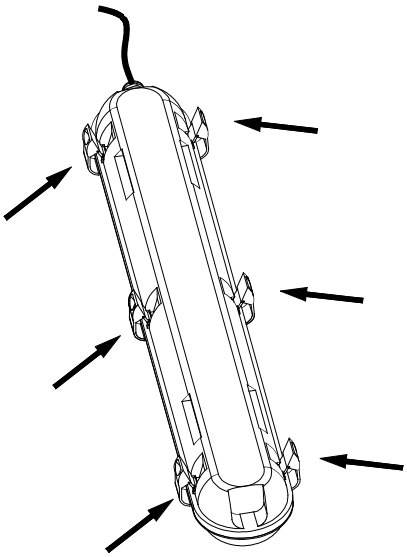

⑥

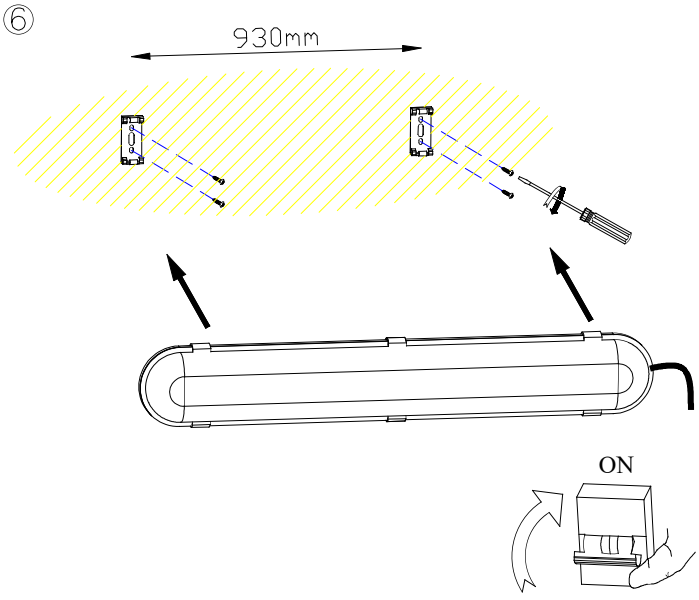

20-05-16