Vitro Double

DE-0195-CRO

Serie de focos Vitro Double LED 12W 3000K ON-OFF Cromo 897lm



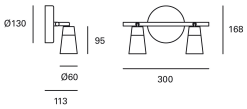

CARACTERÍSTICAS TÉCNICAS

IP20 RF 960ºC 355º ±90º F A↑G

Potencia total luminaria : 12W

Lúmenes reales : 897

Lúmenes nominales : 1400

Lm / W reales : 75

Ángulo Ópticas / Reflector : MEDIUM 28º

UGR : <=19

Material de la estructura : Acero

Acabado estructura : Cromo

Voltaje / Frecuencia : 100-240V ~ 50/60Hz

Protocolo de regulación : ON-OFF

Power Factor : 0.90

Vida útil : 36.000h L70B30

Garantía : 3 Años

Luminaria fácilmente reciclable

CARACTERÍSTICAS LUMINOTÉCNICAS

CRI: 80

MacAdam steps: 3

Riesgo fotobiológico: RG1

UGR

UGR Transversal: 16.2

UGR Longitudinal: 16.1

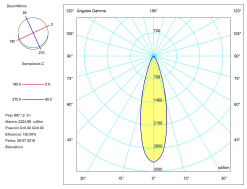

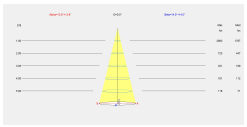

Portalámparas	Cantidad	Potencia fuente de luz (W)	Temperatura de color correlacionada (CCT)
LED	1	10W	3000K

LOGÍSTICA

Peso neto (Kg): 0.79

Peso embalado (Kg): 1.02

Embalaje: 140mm x 130mm x 320mm

12 Un

La imagen puede no coincidir con la referencia, LEDS C4 se reserva el derecho de modificación de alguno de los componentes que componen el producto. Los datos relativos al flujo, la potencia y la Temperatura de Color están sujetos a una tolerancia de +- 10%.

Luminaire
Code DE-0195-CRO
Name Aplique FORLIGHT led 10W 3000K
Measurem.
Code DE-0194-CRO
Name Aplique FORLIGHT led 5W 3000K

Luminaire Flux	897.12 lm	Luminaire Power	6.00 W	Efficacy	149.52 lm/W	Efficiency	100.00%
Lamps Flux	897.12 lm	Maximum value	3224.66 cd/klm	Position	C=0.00 G=0.00	CG	Double Symmetrical

Round Luminaire	Diam. 60 mm	Height	170 mm
Round Luminous Area	Diam. 50 mm	Height	0 mm
Horizontal Luminous Area	0.001963 m2	Emitting area on Plane 180°	0.000000 m2
Emitting area on Plane 0°	0.000000 m2	Emitting area on Plane 270°	0.000000 m2
Emitting area on Plane 90°	0.000000 m2	Glare area at 76°	0.000475 m2
Coordinate system	CG	Symmetry Type	Double Symmetrical
Date	29-07-2016	Maximum Gamma Angle	90
Measurement Distance	0.00	Measurement Flux	897.12 lm
Operator	Asselum T3	Source Voltage [V]	
Temperature	25.00 °C	Source current [A]	
Humidity	60.00 %	Photocell	
Notes			

Luminaire Lamps

Line	Code	Name	Flux [lm]	Pow. [W]	Q.ty
	DE-0195-CRO	DE-0195-CRO - 10 W	897.12	10.00	1

C.I.E.	96 100 100 100 100	D DIN 5040	A60
F UTE	1.00 A	B NBN	BZ 1

Diam=60mm

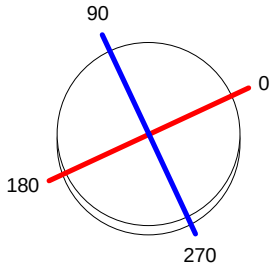

C Halfplanes

180.0 — 0.0
270.0 — 90.0

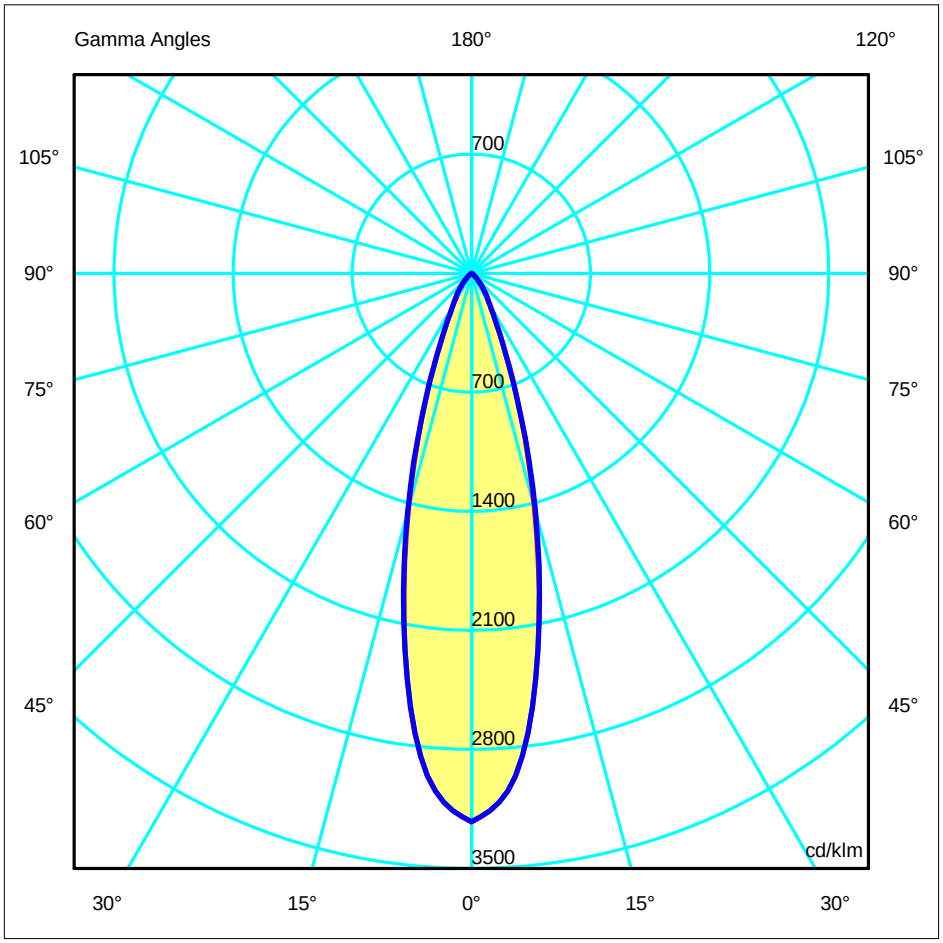

ULOR	0.00 %
DLOR	100.00 %
RN	0.00 %

Luminaire
Code DE-0195-CRO
Name Aplique FORLIGHT led 10W 3000K
Measurem.
Code DE-0194-CRO
Name Aplique FORLIGHT led 5W 3000K

Luminaire Flux	897.12 lm	Luminaire Power	6.00 W	Efficacy	149.52 lm/W	Efficiency	100.00%
Lamps Flux	897.12 lm	Maximum value	3224.66 cd/klm	Position	C=0.00 G=0.00	CG	Double Symmetrical

Luminous Intensity Table cd/klm **Table 1/1**

	C 0.00	C 15.00	C 30.00	C 45.00	C 60.00	C 75.00	C 90.00
G 0.0	3224.66	3224.66	3224.66	3224.66	3224.66	3224.66	3224.66
G 5.0	2967.55	2964.17	2958.69	2963.19	2953.01	2950.26	2966.53
G 10.0	2248.77	2240.37	2244.64	2252.79	2251.60	2255.87	2248.16
G 15.0	1427.14	1423.90	1417.90	1437.84	1435.09	1443.11	1455.15
G 20.0	789.11	780.97	775.18	788.31	783.82	797.71	780.00
G 25.0	386.96	384.02	381.18	390.87	385.42	392.51	392.80
G 30.0	221.82	223.55	221.63	220.52	218.78	218.98	215.45
G 35.0	144.79	144.99	143.88	143.42	140.92	143.33	141.86
G 40.0	86.59	86.97	87.94	86.89	84.18	85.84	85.49
G 45.0	42.28	43.06	44.20	44.92	43.24	43.97	44.29
G 50.0	19.15	19.37	21.10	21.02	20.58	20.50	20.85
G 55.0	4.31	4.83	4.92	5.53	4.96	5.38	5.21
G 60.0	0.42	0.41	0.41	0.43	0.47	0.49	0.49
G 65.0	0.46	0.45	0.46	0.46	0.46	0.47	0.48
G 70.0	0.62	0.60	0.61	0.61	0.63	0.64	0.66
G 75.0	0.85	0.83	0.83	0.85	0.87	0.91	0.93
G 80.0	1.08	1.06	1.07	1.09	1.14	1.19	1.23
G 85.0	1.32	1.30	1.31	1.34	1.40	1.47	1.52
G 90.0	1.55	1.53	1.54	1.59	1.65	1.75	1.81

Luminaire
Code DE-0195-CRO
Name Aplique FORLIGHT led 10W 3000K
Measurem.
Code DE-0194-CRO
Name Aplique FORLIGHT led 5W 3000K

Luminaire Flux	897.12 lm	Luminaire Power	6.00 W	Efficacy	149.52 lm/W	Efficiency	100.00%
Lamps Flux	897.12 lm	Maximum value	3224.66 cd/klm	Position	C=0.00 G=0.00	CG	Double Symmetrical

Diam=60mm

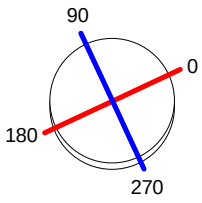

C Halfplanes

180.0 0.0

270.0 90.0

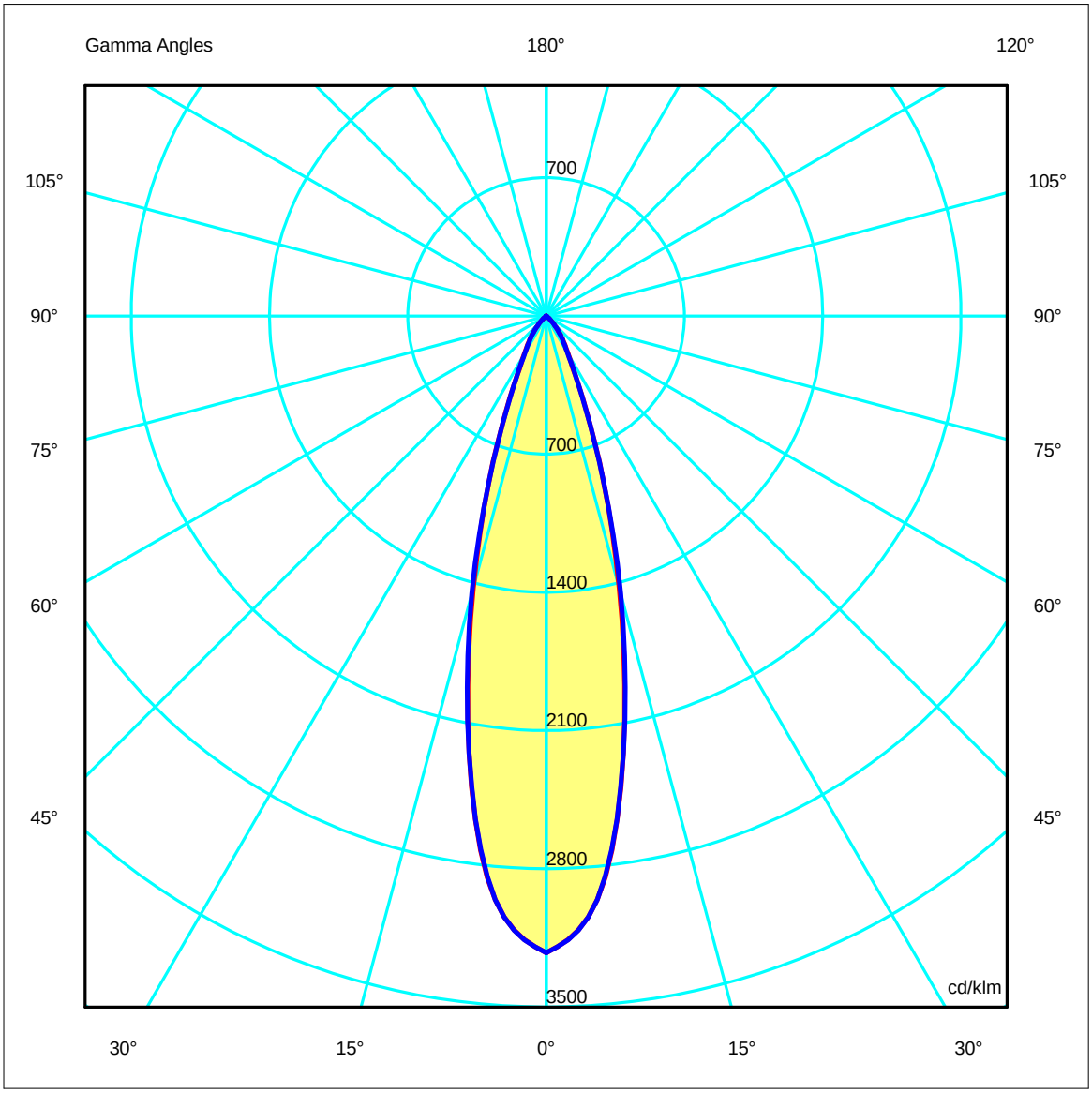

Luminaire
Code DE-0195-CRO
Name Aplique FORLIGHT led 10W 3000K
Measurem.
Code DE-0194-CRO
Name Aplique FORLIGHT led 5W 3000K

Luminaire Flux	897.12 lm	Luminaire Power	6.00 W	Efficacy	149.52 lm/W	Efficiency	100.00%
Lamps Flux	897.12 lm	Maximum value	3224.66 cd/klm	Position	C=0.00 G=0.00	CG	Double Symmetrical

Width at 50.00 % of Max Intensity

H[m]	1.00	2.00	3.00	4.00	5.00	H[m]	1.00	2.00	3.00	4.00	5.00
OA	0.25	0.49	0.74	0.98	1.23	OC	0.25	0.50	0.75	1.00	1.24
OB	0.25	0.49	0.74	0.98	1.23	OD	0.25	0.50	0.75	1.00	1.24

Luminous Intensities [cd/klm]

	0	5	15	25	35	45	55	65	75	85
OA	2892.91	2662.25	1280.32	347.15	129.89	37.93	3.87	0.42	0.76	1.19
OB	2892.91	2662.25	1280.32	347.15	129.89	37.93	3.87	0.42	0.76	1.19
OC	2892.91	2661.33	1305.44	352.39	127.27	39.73	4.67	0.43	0.84	1.36
OD	2892.91	2661.33	1305.44	352.39	127.27	39.73	4.67	0.43	0.84	1.36

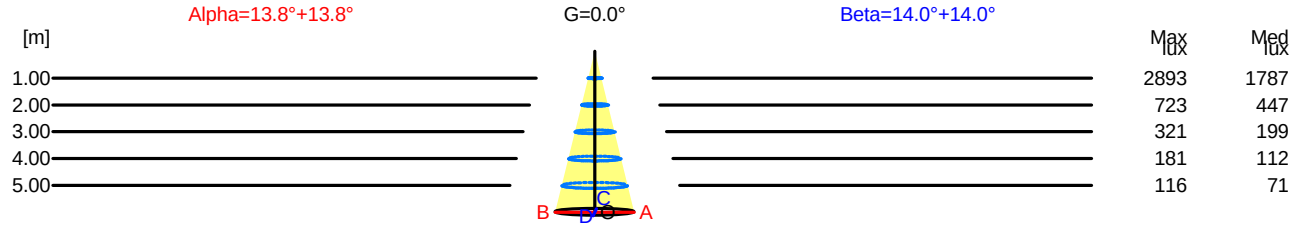

H[m]	D[m]	Max lux	Med lux	Alpha=13.8°+13.8° G=0.0
1.00	0.49	2893	1787	
2.00	0.98	723	447	
3.00	1.47	321	199	
4.00	1.97	181	112	
5.00	2.46	116	71	

H[m]	D[m]	Max lux	Med lux	Beta=14.0°+14.0° G=0.0
1.00	0.50	2893	1787	
2.00	1.00	723	447	
3.00	1.49	321	199	
4.00	1.99	181	112	
5.00	2.49	116	71	

Luminaire
Code DE-0195-CRO
Name Aplique FORLIGHT led 10W 3000K
Measurem.
Code DE-0194-CRO
Name Aplique FORLIGHT led 5W 3000K

Luminaire Flux	897.12 lm	Luminaire Power	6.00 W	Efficacy	149.52 lm/W	Efficiency	100.00%
Lamps Flux	897.12 lm	Maximum value	3224.66 cd/klm	Position	C=0.00 G=0.00	CG	Double Symmetrical

UGR
S = 0.250

Reflectancies										
Ceiling/Cavity	0.7	0.7	0.5	0.5	0.3	0.7	0.7	0.5	0.5	0.3
Walls	0.5	0.3	0.5	0.3	0.3	0.5	0.3	0.5	0.3	0.3
WorkingPlane	0.2	0.2	0.2	0.2	0.2	0.2	0.2	0.2	0.2	0.2
RoomDimensions	ViewedCrosswise					ViewedEndwise				
x=2H y=2H	16.4	17.0	16.6	17.2	17.3	16.3	16.9	16.5	17.1	17.3
x=2H y=3H	16.2	16.8	16.5	17.1	17.2	16.1	16.7	16.4	17.0	17.2
x=2H y=4H	16.2	16.7	16.5	17.0	17.1	16.1	16.6	16.4	16.9	17.1
x=2H y=6H	16.1	16.6	16.4	16.9	17.1	16.0	16.6	16.4	16.8	17.1
x=2H y=8H	16.1	16.6	16.5	16.9	17.1	16.1	16.6	16.4	16.9	17.1
x=2H y=12H	16.1	16.6	16.5	16.9	17.2	16.1	16.6	16.4	16.9	17.2
x=4H y=2H	16.2	16.7	16.5	17.0	17.1	16.1	16.6	16.4	16.9	17.1
x=4H y=3H	16.0	16.5	16.4	16.8	17.0	15.9	16.4	16.3	16.7	17.0
x=4H y=4H	16.0	16.4	16.3	16.7	17.0	15.9	16.3	16.3	16.6	17.0
x=4H y=6H	15.9	16.3	16.3	16.6	17.0	15.9	16.2	16.3	16.6	17.0
x=4H y=8H	16.0	16.3	16.4	16.7	17.0	15.9	16.2	16.3	16.6	17.0
x=4H y=12H	16.1	16.3	16.5	16.7	17.1	16.0	16.3	16.5	16.7	17.1
x=8H y=4H	15.9	16.2	16.3	16.6	16.9	15.8	16.1	16.2	16.5	16.9
x=8H y=6H	15.9	16.1	16.3	16.5	16.9	15.8	16.0	16.2	16.5	16.9
x=8H y=8H	15.9	16.1	16.4	16.6	17.0	15.9	16.1	16.4	16.5	17.0
x=8H y=12H	16.1	16.2	16.6	16.7	17.2	16.1	16.3	16.6	16.7	17.2
x=12H y=4H	15.8	16.1	16.3	16.5	16.8	15.7	16.0	16.2	16.4	16.8
x=12H y=6H	15.8	16.0	16.3	16.5	16.9	15.8	16.0	16.2	16.4	16.9
x=12H y=8H	15.9	16.1	16.4	16.5	17.0	15.9	16.0	16.4	16.5	17.0

Luminaire
Code DE-0195-CRO
Name Aplique FORLIGHT led 10W 3000K
Measurem.
Code DE-0194-CRO
Name Aplique FORLIGHT led 5W 3000K

Luminaire Flux	897.12 lm	Luminaire Power	6.00 W	Efficacy	149.52 lm/W	Efficiency	100.00%
Lamps Flux	897.12 lm	Maximum value	3224.66 cd/klm	Position	C=0.00 G=0.00	CG	Double Symmetrical

Diam=60mm

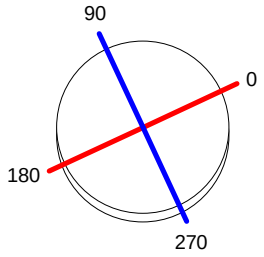

C Halfplanes

180.0 0.0
270.0 90.0

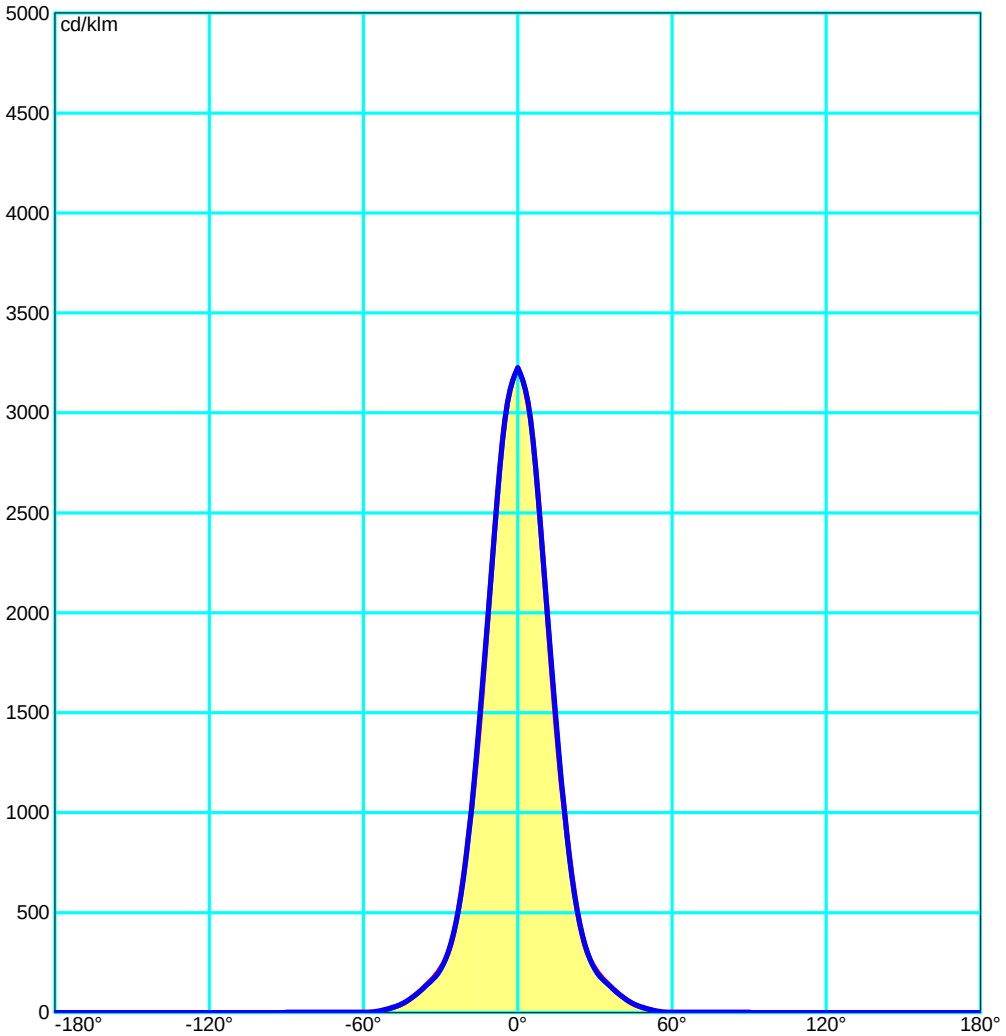

Luminaire
Code DE-0195-CRO
Name Aplique FORLIGHT led 10W 3000K
Measurem.
Code DE-0194-CRO
Name Aplique FORLIGHT led 5W 3000K

Luminaire Flux	897.12 lm	Luminaire Power	6.00 W	Efficacy	149.52 lm/W	Efficiency	100.00%
Lamps Flux	897.12 lm	Maximum value	3224.66 cd/klm	Position	C=0.00 G=0.00	CG	Double Symmetrical

Luminance

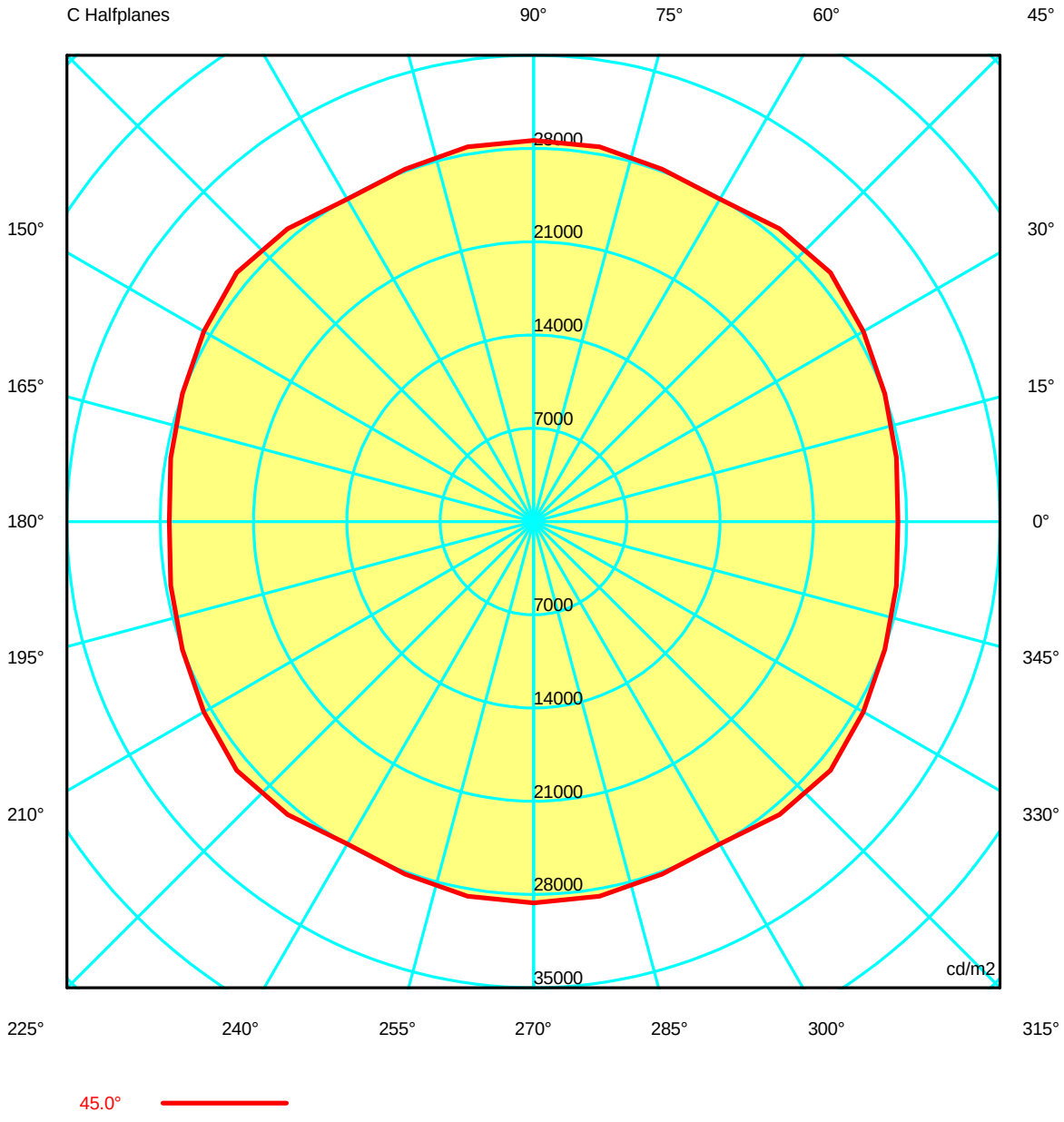

Luminaire
Code DE-0195-CRO
Name Aplique FORLIGHT led 10W 3000K
Measurem.
Code DE-0194-CRO
Name Aplique FORLIGHT led 5W 3000K

Luminaire Flux	897.12 lm	Luminaire Power	6.00 W	Efficacy	149.52 lm/W	Efficiency	100.00%
Lamps Flux	897.12 lm	Maximum value	3224.66 cd/klm	Position	C=0.00 G=0.00	CG	Double Symmetrical

Luminance cd/m2 **Table 1/3**

	C 0.00	C 10.00	C 20.00	C 30.00	C 40.00	C 50.00	C 60.00	C 70.00	C 80.00	C 90.00	C 100.00	C 110.00	C 120.00
G 0.0	1473719.45	1473719.45	1473719.45	1473719.45	1473719.45	1473719.45	1473719.45	1473719.45	1473719.45	1473719.45	1473719.45	1473719.45	1473719.45
G 5.0	1361396.41	1360631.15	1358703.86	1357329.05	1359026.75	1358443.64	1354725.68	1352876.86	1355230.01	1360924.66	1355230.01	1352876.86	1354725.68
G 10.0	1043573.79	1040477.71	1039687.97	1041657.71	1044614.85	1045408.78	1044890.08	1046425.51	1046328.19	1043294.40	1046328.19	1046425.51	1044890.08
G 15.0	675234.01	674753.65	671949.68	670858.13	677440.61	680783.83	678994.26	680856.26	684733.67	688483.97	684733.67	680856.26	678994.26
G 20.0	383780.23	381355.83	378066.64	377006.61	381766.07	382860.87	381207.89	386214.14	386931.20	379348.24	386931.20	386214.14	381207.89
G 25.0	195130.65	194372.11	192647.04	192215.92	195915.73	196558.63	194352.99	196488.94	197976.49	198071.85	197976.49	196488.94	194352.99
G 30.0	117059.02	117876.02	117748.15	116958.24	116578.17	116029.07	115454.27	115608.94	115165.65	113698.23	115165.65	115608.94	115454.27
G 35.0	80777.40	80949.60	80688.52	80271.97	80241.13	79473.58	78618.94	79505.28	79989.90	79145.35	79989.90	79505.28	78618.94
G 40.0	51656.65	51755.89	52095.30	52465.55	52269.41	51190.50	50223.41	50813.28	51335.21	51003.91	51335.21	50813.28	50223.41
G 45.0	27328.48	27643.79	28041.43	28570.21	29065.14	28702.78	27947.41	28165.71	28562.48	28624.61	28562.48	28165.71	27947.41
G 50.0	13615.36	13717.73	14166.46	15000.95	15074.35	14815.22	14634.64	14560.60	14634.50	14823.68	14634.50	14560.60	14634.64
G 55.0	3433.27	3763.49	3856.88	3920.90	4314.19	4291.56	3950.46	4148.41	4317.16	4151.78	4317.16	4148.41	3950.46
G 60.0	382.78	377.03	375.06	377.86	385.69	406.02	431.44	443.44	445.31	445.32	445.31	443.44	431.44
G 65.0	502.63	492.90	491.72	496.75	497.48	498.72	500.47	506.39	512.65	517.77	512.65	506.39	500.47
G 70.0	827.32	809.67	808.32	817.69	819.08	827.14	844.09	855.81	866.58	879.76	866.58	855.81	844.09
G 75.0	1495.55	1468.70	1459.40	1469.00	1485.43	1507.05	1537.99	1580.63	1619.30	1648.50	1619.30	1580.63	1537.99
G 80.0	2854.21	2798.01	2790.05	2822.10	2849.48	2903.19	2992.77	3088.91	3171.48	3239.17	3171.48	3088.91	2992.77
G 85.0	6931.54	6843.06	6815.55	6865.10	6968.33	7121.87	7336.71	7606.91	7827.73	7972.09	7827.73	7606.91	7336.71
G 90.0	0.00	0.00	0.00	0.00	0.00	0.00	0.00	0.00	0.00	0.00	0.00	0.00	0.00

Luminaire
Code DE-0195-CRO
Name Aplique FORLIGHT led 10W 3000K
Measurem.
Code DE-0194-CRO
Name Aplique FORLIGHT led 5W 3000K

Luminaire Flux	897.12 lm	Luminaire Power	6.00 W	Efficacy	149.52 lm/W	Efficiency	100.00%
Lamps Flux	897.12 lm	Maximum value	3224.66 cd/klm	Position	C=0.00 G=0.00	CG	Double Symmetrical

Luminance cd/m2 **Table 2/3**

	C 130.00	C 140.00	C 150.00	C 160.00	C 170.00	C 180.00	C 190.00	C 200.00	C 210.00	C 220.00	C 230.00	C 240.00	C 250.00
G 0.0	1473719.45	1473719.45	1473719.45	1473719.45	1473719.45	1473719.45	1473719.45	1473719.45	1473719.45	1473719.45	1473719.45	1473719.45	1473719.45
G 5.0	1358443.64	1359026.75	1357329.05	1358703.86	1360631.15	1361396.41	1360631.15	1358703.86	1357329.05	1359026.75	1358443.64	1354725.68	1352876.86
G 10.0	1045408.78	1044614.85	1041657.71	1039687.97	1040477.71	1043573.79	1040477.71	1039687.97	1041657.71	1044614.85	1045408.78	1044890.08	1046425.51
G 15.0	680783.83	677440.61	670858.13	671949.68	674753.65	675234.01	674753.65	671949.68	670858.13	677440.61	680783.83	678994.26	680856.26
G 20.0	382860.87	381766.07	377006.61	378066.64	381355.83	383780.23	381355.83	378066.64	377006.61	381766.07	382860.87	381207.89	386214.14
G 25.0	196558.63	195915.73	192215.92	192647.04	194372.11	195130.65	194372.11	192647.04	192215.92	195915.73	196558.63	194352.99	196488.94
G 30.0	116029.07	116578.17	116958.24	117748.15	117876.02	117059.02	117876.02	117748.15	116958.24	116578.17	116029.07	115454.27	115608.94
G 35.0	79473.58	80241.13	80271.97	80688.52	80949.60	80777.40	80949.60	80688.52	80271.97	80241.13	79473.58	78618.94	79505.28
G 40.0	51190.50	52269.41	52465.55	52095.30	51755.89	51656.65	51755.89	52095.30	52465.55	52269.41	51190.50	50223.41	50813.28
G 45.0	28702.78	29065.14	28570.21	28041.43	27643.79	27328.48	27643.79	28041.43	28570.21	29065.14	28702.78	27947.41	28165.71
G 50.0	14815.22	15074.35	15000.95	14166.46	13717.73	13615.36	13717.73	14166.46	15000.95	15074.35	14815.22	14634.64	14560.60
G 55.0	4291.56	4314.19	3920.90	3856.88	3763.49	3433.27	3763.49	3856.88	3920.90	4314.19	4291.56	3950.46	4148.41
G 60.0	406.02	385.69	377.86	375.06	377.03	382.78	377.03	375.06	377.86	385.69	406.02	431.44	443.44
G 65.0	498.72	497.48	496.75	491.72	492.90	502.63	492.90	491.72	496.75	497.48	498.72	500.47	506.39
G 70.0	827.14	819.08	817.69	808.32	809.67	827.32	809.67	808.32	817.69	819.08	827.14	844.09	855.81
G 75.0	1507.05	1485.43	1469.00	1459.40	1468.70	1495.55	1468.70	1459.40	1469.00	1485.43	1507.05	1537.99	1580.63
G 80.0	2903.19	2849.48	2822.10	2790.05	2798.01	2854.21	2798.01	2790.05	2822.10	2849.48	2903.19	2992.77	3088.91
G 85.0	7121.87	6968.33	6865.10	6815.55	6843.06	6931.54	6843.06	6815.55	6865.10	6968.33	7121.87	7336.71	7606.91
G 90.0	0.00	0.00	0.00	0.00	0.00	0.00	0.00	0.00	0.00	0.00	0.00	0.00	0.00

Luminaire
Code DE-0195-CRO
Name Aplique FORLIGHT led 10W 3000K
Measurem.
Code DE-0194-CRO
Name Aplique FORLIGHT led 5W 3000K

Luminaire Flux	897.12 lm	Luminaire Power	6.00 W	Efficacy	149.52 lm/W	Efficiency	100.00%
Lamps Flux	897.12 lm	Maximum value	3224.66 cd/klm	Position	C=0.00 G=0.00	CG	Double Symmetrical

Luminance cd/m2 **Table 3/3**

	C 260.00	C 270.00	C 280.00	C 290.00	C 300.00	C 310.00	C 320.00	C 330.00	C 340.00	C 350.00
G 0.0	1473719.45	1473719.45	1473719.45	1473719.45	1473719.45	1473719.45	1473719.45	1473719.45	1473719.45	1473719.45
G 5.0	1355230.01	1360924.66	1355230.01	1352876.86	1354725.68	1358443.64	1359026.75	1357329.05	1358703.86	1360631.15
G 10.0	1046328.19	1043294.40	1046328.19	1046425.51	1044890.08	1045408.78	1044614.85	1041657.71	1039687.97	1040477.71
G 15.0	684733.67	688483.97	684733.67	680856.26	678994.26	680783.83	677440.61	670858.13	671949.68	674753.65
G 20.0	386931.20	379348.24	386931.20	386214.14	381207.89	382860.87	381766.07	377006.61	378066.64	381355.83
G 25.0	197976.49	198071.85	197976.49	196488.94	194352.99	196558.63	195915.73	192215.92	192647.04	194372.11
G 30.0	115165.65	113698.23	115165.65	115608.94	115454.27	116029.07	116578.17	116958.24	117748.15	117876.02
G 35.0	79989.90	79145.35	79989.90	79505.28	78618.94	79473.58	80241.13	80271.97	80688.52	80949.60
G 40.0	51335.21	51003.91	51335.21	50813.28	50223.41	51190.50	52269.41	52465.55	52095.30	51755.89
G 45.0	28562.48	28624.61	28562.48	28165.71	27947.41	28702.78	29065.14	28570.21	28041.43	27643.79
G 50.0	14634.50	14823.68	14634.50	14560.60	14634.64	14815.22	15074.35	15000.95	14166.46	13717.73
G 55.0	4317.16	4151.78	4317.16	4148.41	3950.46	4291.56	4314.19	3920.90	3856.88	3763.49
G 60.0	445.31	445.32	445.31	443.44	431.44	406.02	385.69	377.86	375.06	377.03
G 65.0	512.65	517.77	512.65	506.39	500.47	498.72	497.48	496.75	491.72	492.90
G 70.0	866.58	879.76	866.58	855.81	844.09	827.14	819.08	817.69	808.32	809.67
G 75.0	1619.30	1648.50	1619.30	1580.63	1537.99	1507.05	1485.43	1469.00	1459.40	1468.70
G 80.0	3171.48	3239.17	3171.48	3088.91	2992.77	2903.19	2849.48	2822.10	2790.05	2798.01
G 85.0	7827.73	7972.09	7827.73	7606.91	7336.71	7121.87	6968.33	6865.10	6815.55	6843.06
G 90.0	0.00	0.00	0.00	0.00	0.00	0.00	0.00	0.00	0.00	0.00

Luminaire
Code DE-0195-CRO
Name Aplique FORLIGHT led 10W 3000K
Measurem.
Code DE-0194-CRO
Name Aplique FORLIGHT led 5W 3000K

Luminaire Flux	897.12 lm	Luminaire Power	6.00 W	Efficacy	149.52 lm/W	Efficiency	100.00%
Lamps Flux	897.12 lm	Maximum value	3224.66 cd/klm	Position	C=0.00 G=0.00	CG	Double Symmetrical

PERCENTAGE ISOCANDLES

Projection: Equal Area Tilting Angle:0°

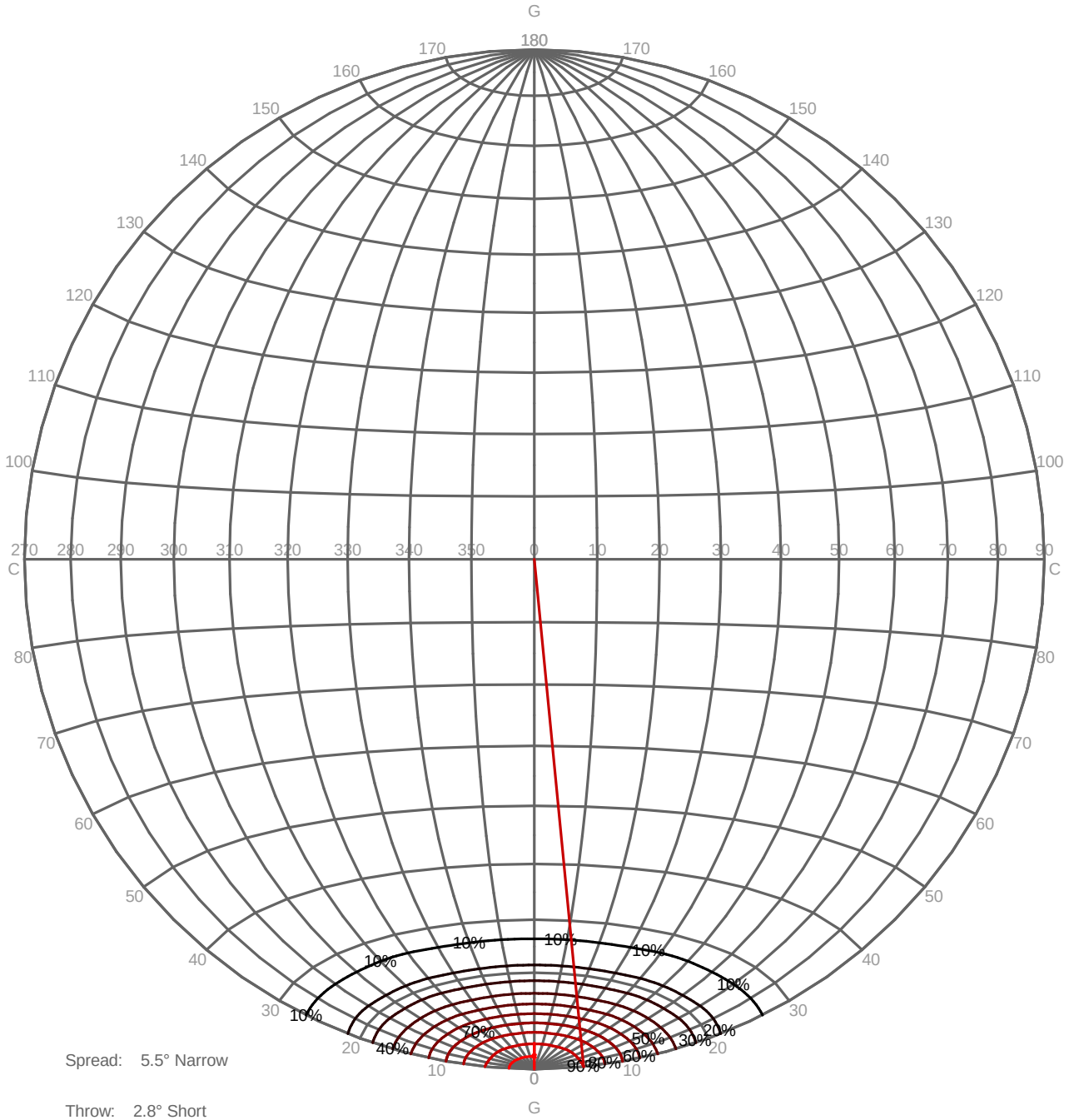

Spread: 5.5° Narrow

Throw: 2.8° Short

Luminaire
Code DE-0195-CRO
Name Aplique FORLIGHT led 10W 3000K
Measurem.
Code DE-0194-CRO
Name Aplique FORLIGHT led 5W 3000K

Luminaire Flux	897.12 lm	Luminaire Power	6.00 W	Efficacy	149.52 lm/W	Efficiency	100.00%
Lamps Flux	897.12 lm	Maximum value	3224.66 cd/klm	Position	C=0.00 G=0.00	CG	Double Symmetrical

Isolux (Floor)

Luminaire position X=0.00m Y=0.00m Z=2.50m

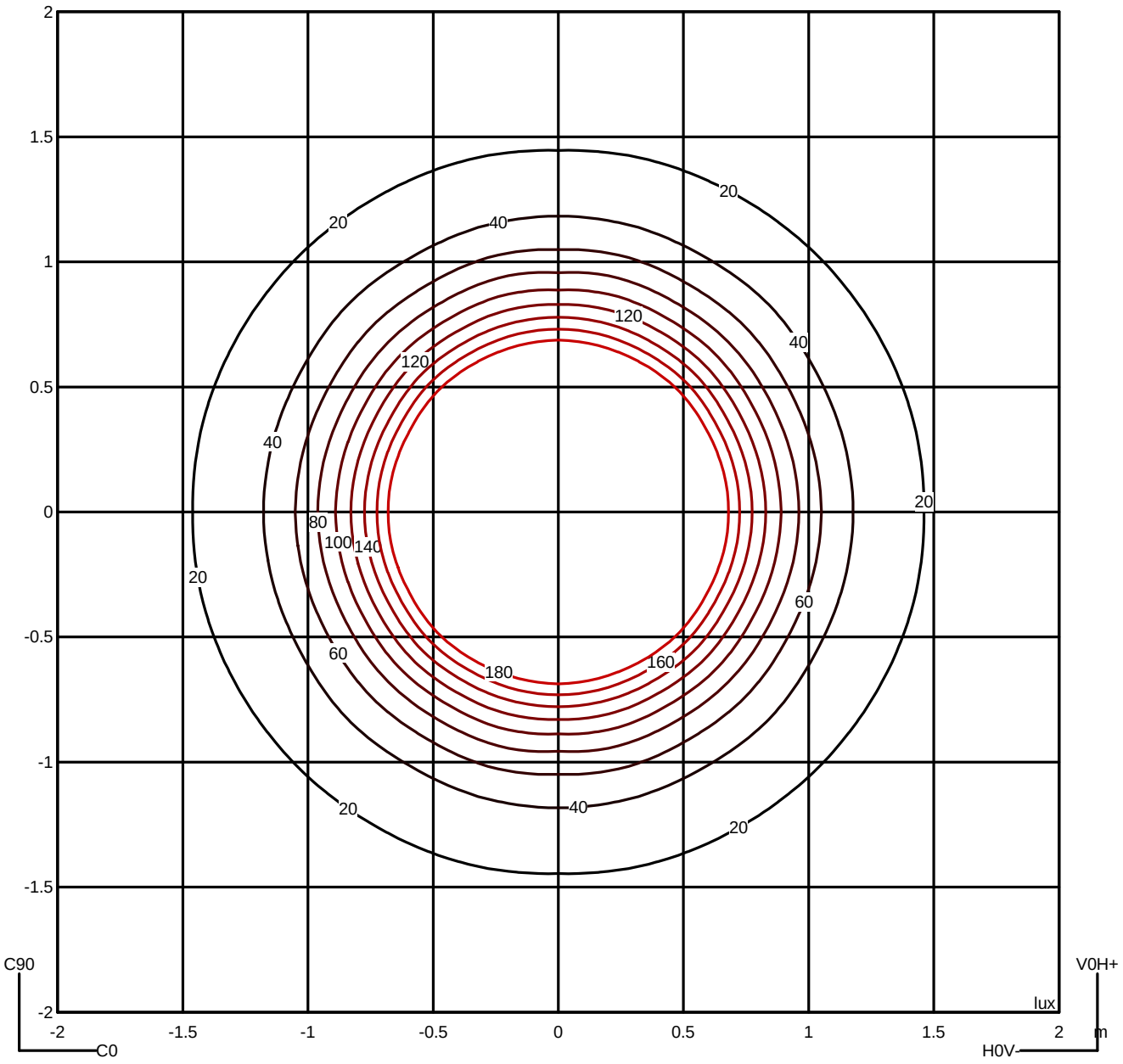

Luminaire
Code DE-0195-CRO
Name Aplique FORLIGHT led 10W 3000K
Measurem.
Code DE-0194-CRO
Name Aplique FORLIGHT led 5W 3000K

Luminaire Flux	897.12 lm	Luminaire Power	6.00 W	Efficacy	149.52 lm/W	Efficiency	100.00%
Lamps Flux	897.12 lm	Maximum value	3224.66 cd/klm	Position	C=0.00 G=0.00	CG	Double Symmetrical

Average Luminance [cd/m²]

	45°	50°	55°	60°	65°	70°	75°	80°	85°	
0.0°	27328	13615	3433	383	503	827	1496	2854	6932	---
90.0°	28625	14824	4152	445	518	880	1649	3239	7972	---

Flush mounted or longitudinal view

		Illumination(lx)										
A	A	2000	1000	750	500		<300					1.15
B	1		2000	1500	1000	750	500	<300				1.5
C					2000		1000	500	<300			1.85
D	2						2000	1000	500	<300		2.2
E	3							2000	1000	500	<300	2.55

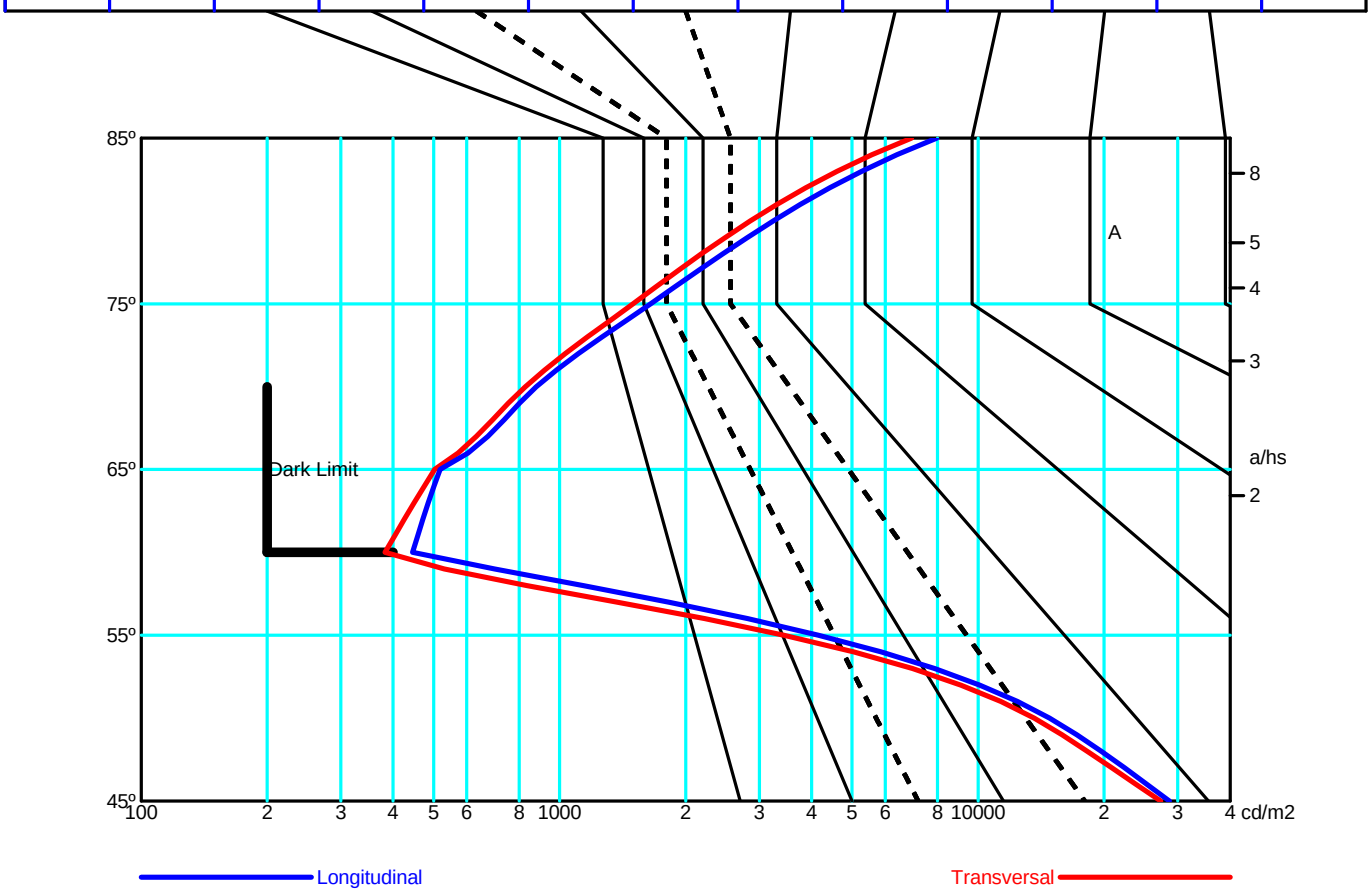

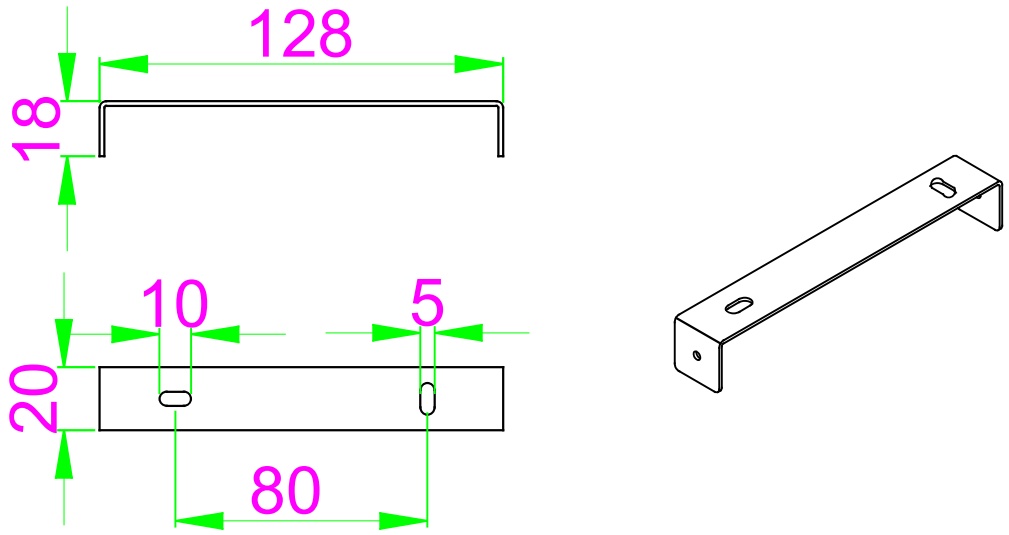
128
18
10
5
20
80

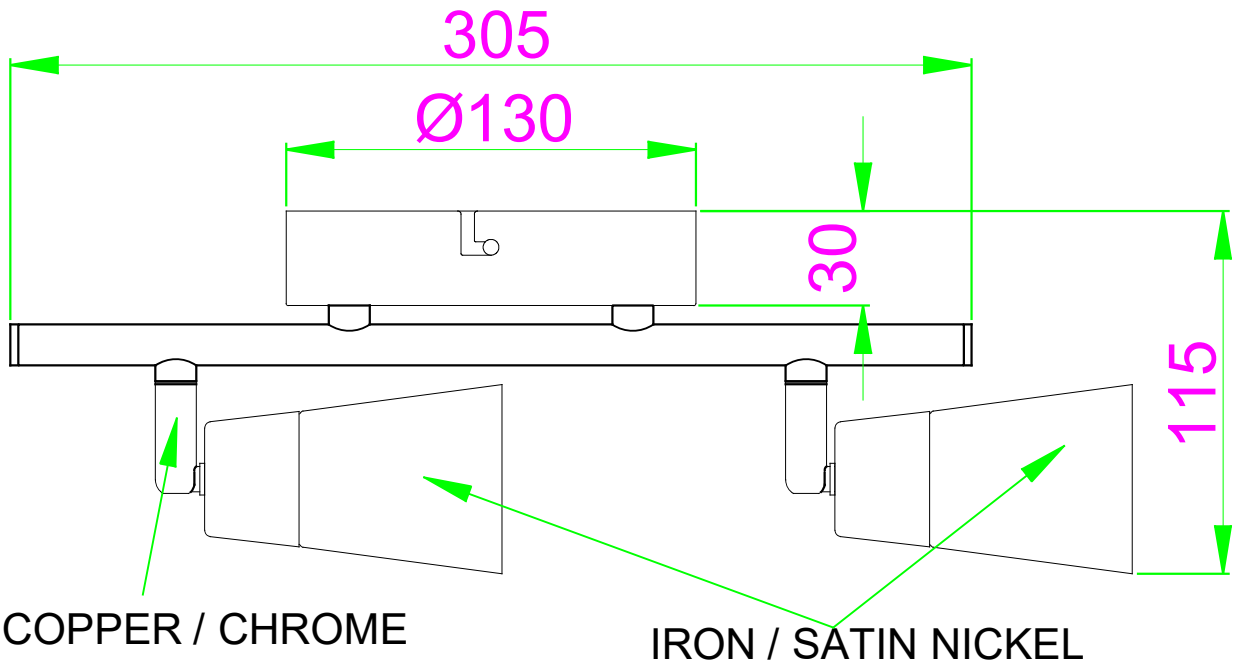
305
Ø130
30
115
COPPER / CHROME
IRON / SATIN NICKEL

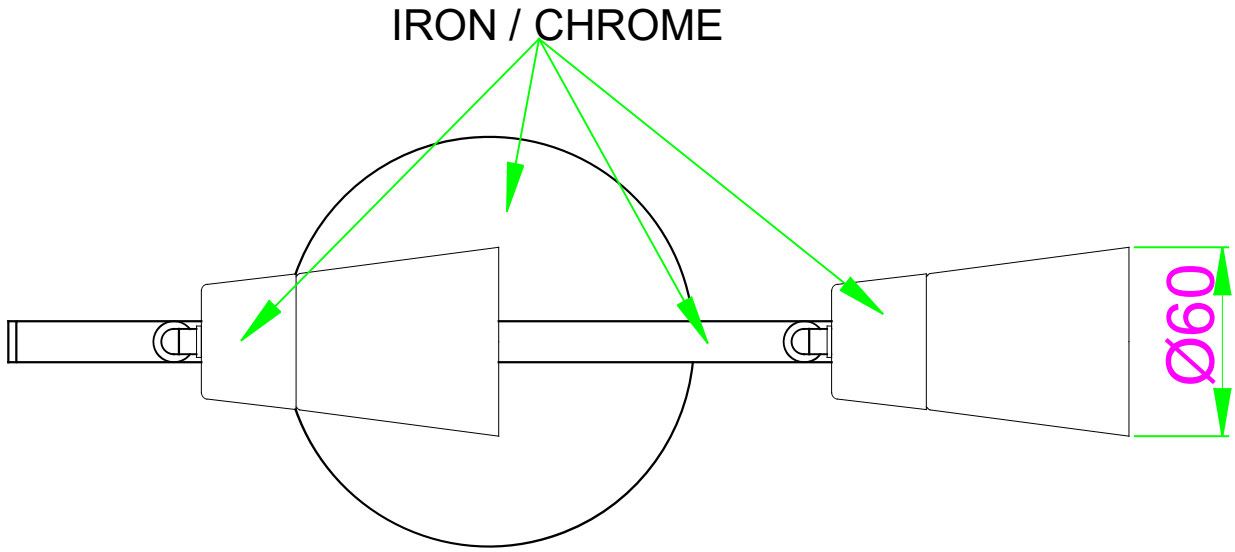
IRON / CHROME
Ø60

DE-0195

1

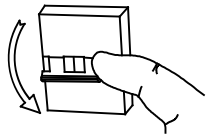

OFF

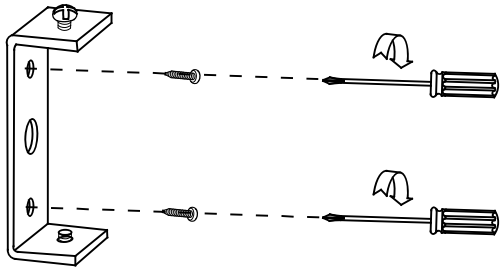

2

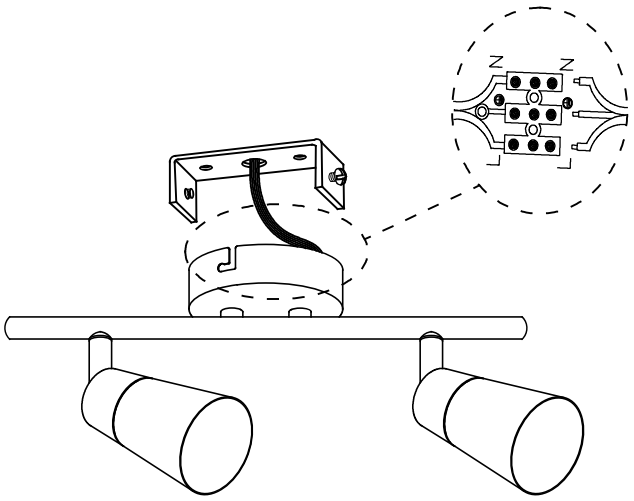

3

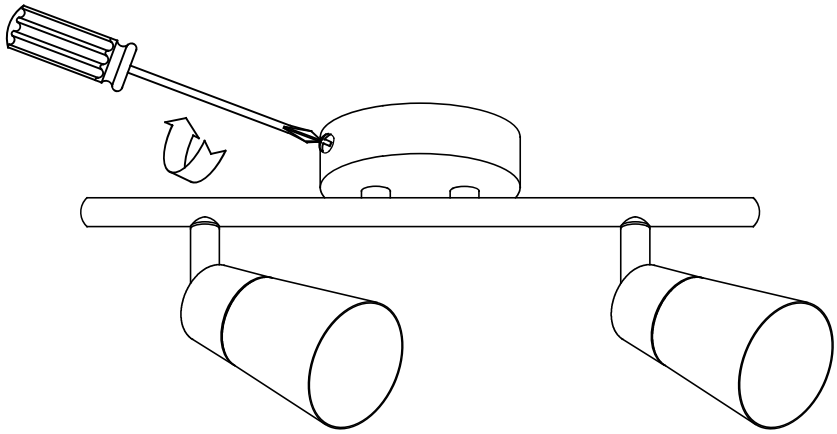

4

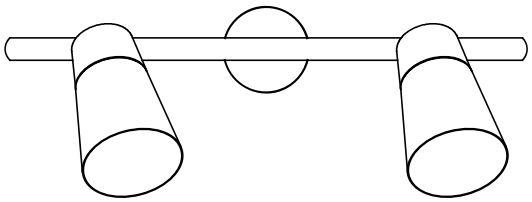

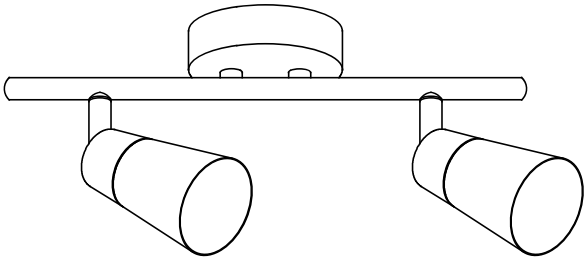

ON

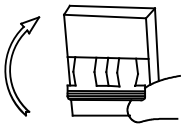

19–03–16