Olra Ø380mm Smart

LedsC4 Team

DE-0513-BLA

Superficie de Techo Olra Ø380mm Smart LED 21;NAW TW 2700-6500K LIGHT FOR LIFE Blanco 2160lm

CARACTERÍSTICAS TÉCNICAS

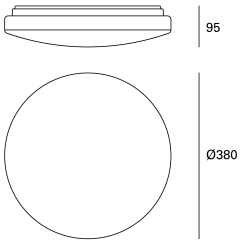

IP23

Potencia total luminaria : 23.1W

Lúmenes reales : 2160 (4000K)

Lúmenes nominales : 2420

Lm / W reales : 89

Temperatura de color correlacionada (CCT) : TW 2700-6500K

Ángulo Ópticas / Reflector : HORIZONTAL 120º

Material de la estructura : Acero

Acabado estructura : Blanco

Material del difusor : Acrílico

Acabado difusor : Opal

Voltaje / Frecuencia : 230V ~ 50/60Hz

Protocolo de regulación : LIGHT FOR LIFE

Power Factor : 0.42

Vida útil : 36.000h L70B30

Garantía : 2 Años

Luminaria fácilmente reciclable

CARACTERÍSTICAS LUMINOTÉCNICAS

CRI: 80

MacAdam steps: 3

Riesgo fotobiológico: RG0, RG1

Portalámparas	Cantidad	Potencia fuente de luz (W)
LED	1	21W
LED	1	-

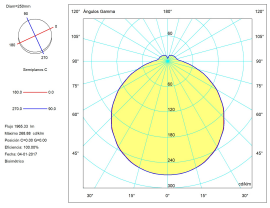

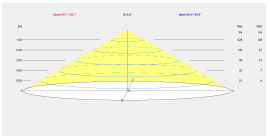

LOGÍSTICA

Peso neto (Kg): 0.78

Peso embalado (Kg): 1.21

Embalaje: 385mm x 100mm x 385mm

10 Un

La imagen puede no coincidir con la referencia, LEDS C4 se reserva el derecho de modificación de alguno de los componentes que componen el producto. Los datos relativos al flujo, la potencia y la Temperatura de Color están sujetos a una tolerancia de +- 10%.

Luminaire
Code DE-0513-BLA
Name OLRA
Measurem.
Code DE-0513-BLA
Name OLRA

Luminaire Flux	1965.32 lm	Luminaire Power	24.20 W	Efficacy	81.21 lm/W	Efficiency	100.00%
Sources Flux	1965.33 lm	Maximum value	268.88 cd/klm	Position	C=0.00 G=0.00	CG	Double Symmetrical

Round Luminaire	Diam. 250 mm	Height	78 mm
Round Luminous Area	Diam. 250 mm	Height	50 mm
Horizontal Luminous Area	0.049087 m2	Emitting area on Plane 180°	0.012500 m2
Emitting area on Plane 0°	0.012500 m2	Emitting area on Plane 270°	0.012500 m2
Emitting area on Plane 90°	0.012500 m2	Glare area at 76°	0.024004 m2
Coordinate system	CG	Symmetry Type	Double Symmetrical
Date	04-01-2017	Maximum Gamma Angle	180
Measurement Distance	0.00	Measurement Flux	1920.67 lm
Operator	Asselum T2	Rated Voltage	
Temperature	25.00 °C	Rated Current	
Humidity	60.00 %	Photocell	
Notes			

Luminaire Lamps

Line	Code	Name	Flux [lm]	Pow. [W]	Q.ty
	DE-0513-BLA	DE-0198-BLA	1965.33	24.20	1

C.I.E.	42 72 91 87 100	D DIN 5040	B31
F UTE	0.87 G + 0.13 T	B NBN	BZ 5

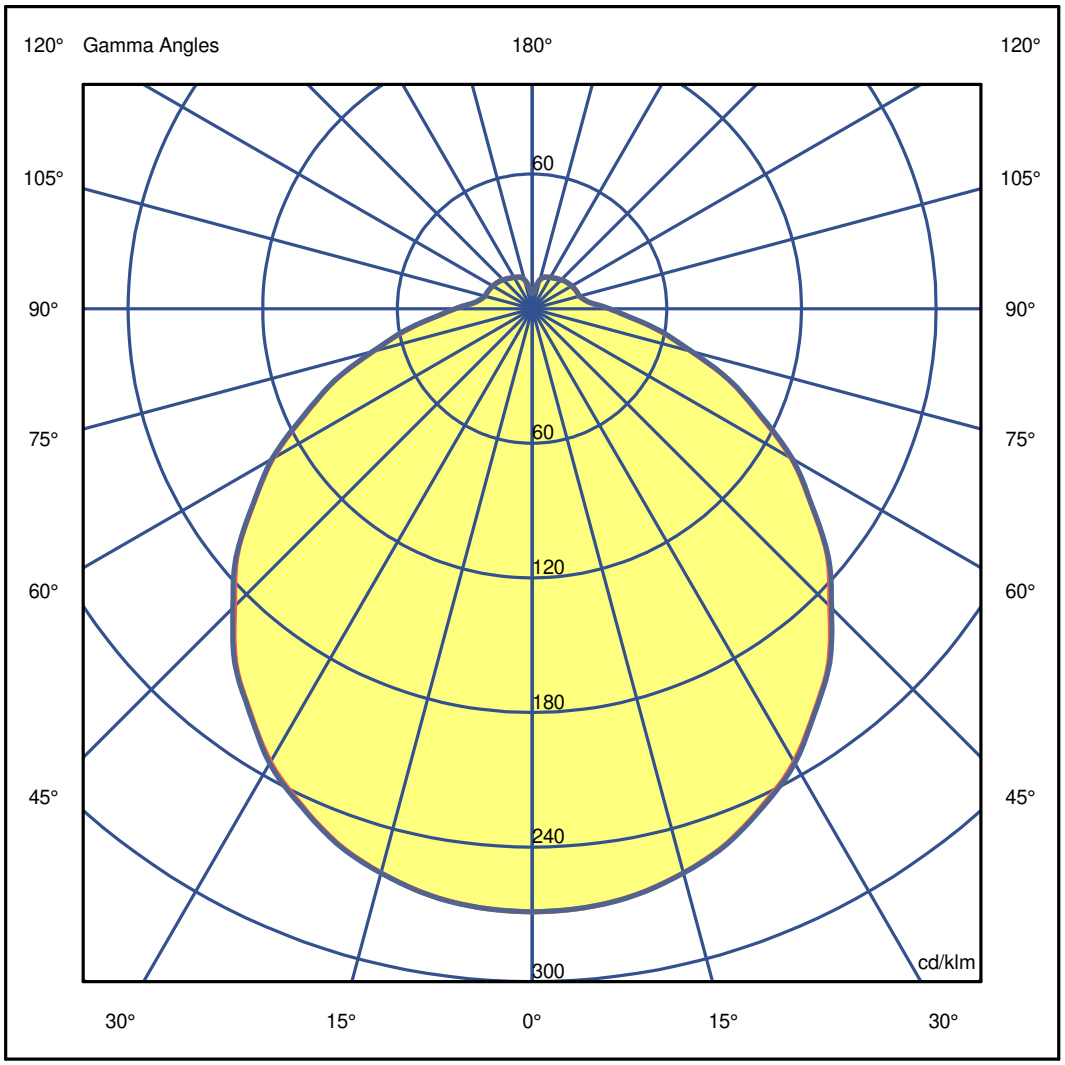

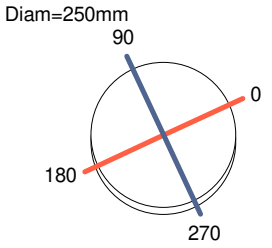

C Halfplanes
180.0 0.0
270.0 90.0

ULOR 12.92 %
DLOR 87.08 %
RN 12.92 %

Luminaire
Code DE-0513-BLA
Name OLRA
Measurem.
Code DE-0513-BLA
Name OLRA

Luminaire Flux	1965.32 lm	Luminaire Power	24.20 W	Efficacy	81.21 lm/W	Efficiency	100.00%
Sources Flux	1965.33 lm	Maximum value	268.88 cd/klm	Position	C=0.00 G=0.00	CG	Double Symmetrical

Luminous Intensity Table cd/klm **Table 1/1**

	C 0.00	C 15.00	C 30.00	C 45.00	C 60.00	C 75.00	C 90.00
G 0.0	268.88	268.88	268.88	268.88	268.88	268.88	268.88
G 5.0	267.98	268.03	267.94	268.00	267.98	267.94	267.96
G 10.0	265.23	265.18	265.17	265.14	265.17	265.12	265.32
G 15.0	260.27	260.31	260.63	260.59	260.44	260.24	260.40
G 20.0	253.53	253.16	253.15	253.25	253.33	253.27	253.93
G 25.0	243.77	243.88	244.38	244.40	244.25	244.14	244.31
G 30.0	233.26	232.72	232.61	232.67	232.79	232.78	233.99
G 35.0	219.13	219.24	219.73	220.06	220.16	219.67	219.59
G 40.0	205.52	204.93	204.52	204.50	204.63	204.82	206.21
G 45.0	187.56	187.86	188.61	188.61	189.00	188.90	188.60
G 50.0	171.72	170.98	170.52	170.35	170.43	170.84	172.32
G 55.0	151.59	151.36	152.17	152.68	152.44	152.76	151.90
G 60.0	133.26	133.45	132.66	131.98	132.33	132.55	133.92
G 65.0	111.62	111.88	112.55	113.14	112.87	113.27	112.25
G 70.0	93.55	93.46	92.79	92.31	92.56	93.06	93.82
G 75.0	73.23	73.31	73.92	75.24	74.29	74.94	73.51
G 80.0	58.05	58.35	57.63	57.49	57.80	58.40	58.51
G 85.0	43.83	43.88	44.14	45.16	44.50	45.11	44.01
G 90.0	34.44	34.56	34.00	34.22	34.17	34.82	34.47
G 95.0	27.06	27.19	27.18	27.81	27.38	27.93	27.10
G100.0	23.46	23.61	23.36	23.60	23.46	23.95	23.57
G105.0	21.81	21.90	21.82	22.02	21.85	22.10	21.86
G110.0	21.36	21.38	21.32	21.29	21.30	21.35	21.36
G115.0	20.82	20.87	20.84	20.85	20.84	20.89	20.85
G120.0	20.33	20.36	20.31	20.30	20.31	20.35	20.36
G125.0	19.70	19.72	19.73	19.74	19.74	19.73	19.72
G130.0	19.09	19.11	19.06	19.06	19.04	19.07	19.04
G135.0	18.34	18.38	18.39	18.40	18.39	18.38	18.21
G140.0	17.65	17.66	17.61	17.62	17.59	17.58	17.39
G145.0	16.86	16.90	16.91	16.91	16.82	16.81	16.69
G150.0	16.23	16.24	16.18	16.12	16.01	16.10	16.10
G155.0	15.60	15.56	15.45	15.38	15.33	15.50	15.61
G160.0	14.99	14.79	14.64	14.47	14.62	14.84	15.05
G165.0	13.25	13.23	13.28	12.97	13.14	13.18	13.52
G170.0	10.70	10.67	10.86	10.79	10.79	10.79	10.75
G175.0	7.61	8.14	7.51	8.14	7.51	8.12	7.66
G180.0	7.09	7.13	7.10	7.08	6.99	6.98	6.95

Luminaire
Code DE-0513-BLA
Name OLRA
Measurem.
Code DE-0513-BLA
Name OLRA

Luminaire Flux	1965.32 lm	Luminaire Power	24.20 W	Efficacy	81.21 lm/W	Efficiency	100.00%
Sources Flux	1965.33 lm	Maximum value	268.88 cd/klm	Position	C=0.00 G=0.00	CG	Double Symmetrical

Diam=250mm

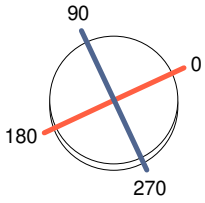

C Halfplanes



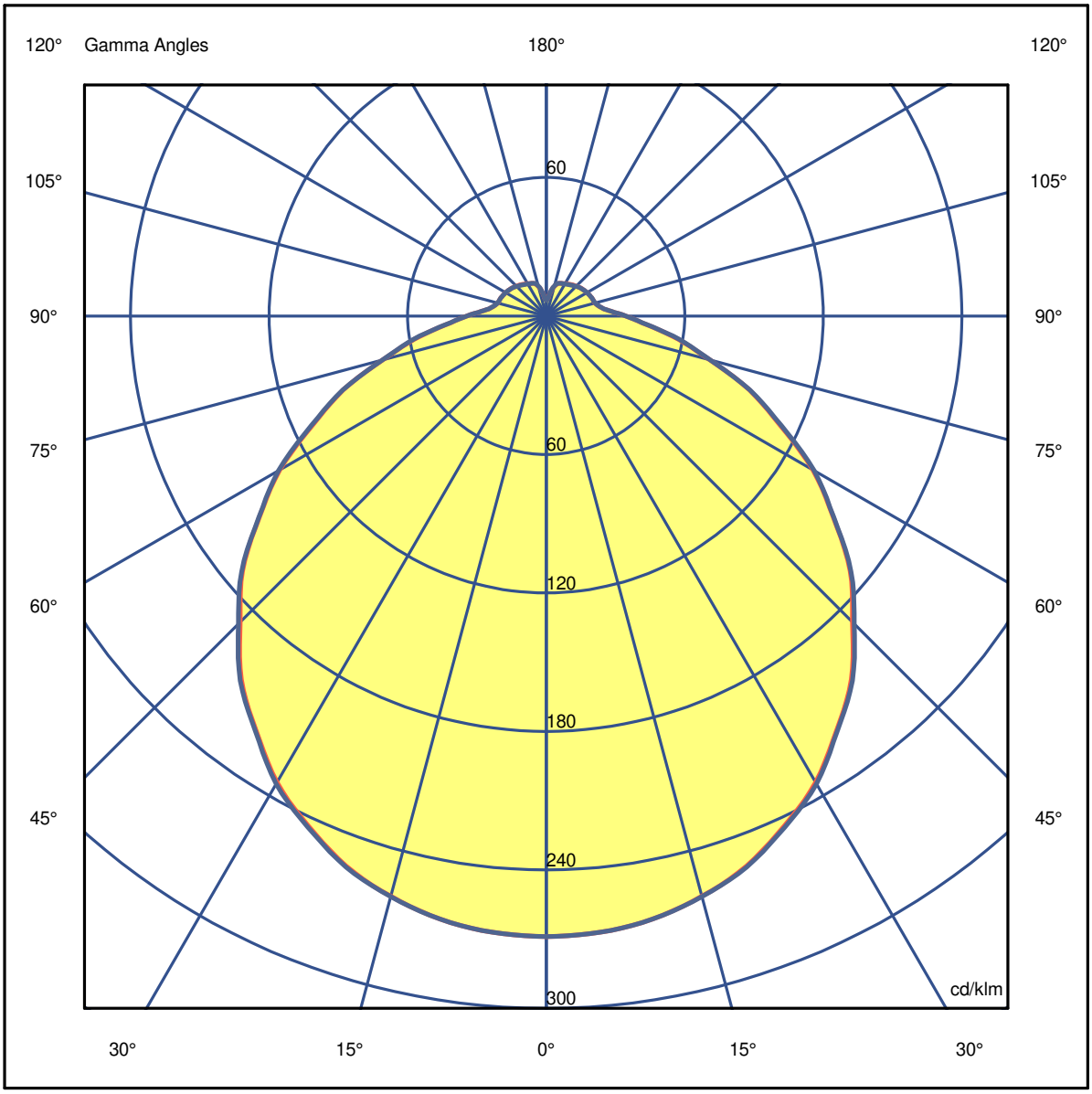

Luminaire
Code DE-0513-BLA
Name OLRA
Measurem.
Code DE-0513-BLA
Name OLRA

Luminaire Flux	1965.32 lm	Luminaire Power	24.20 W	Efficacy	81.21 lm/W	Efficiency	100.00%
Sources Flux	1965.33 lm	Maximum value	268.88 cd/klm	Position	C=0.00 G=0.00	CG	Double Symmetrical

Diam=250mm

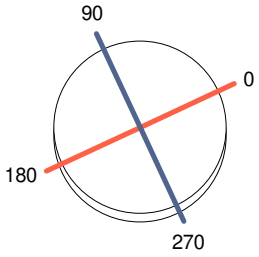

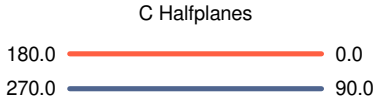

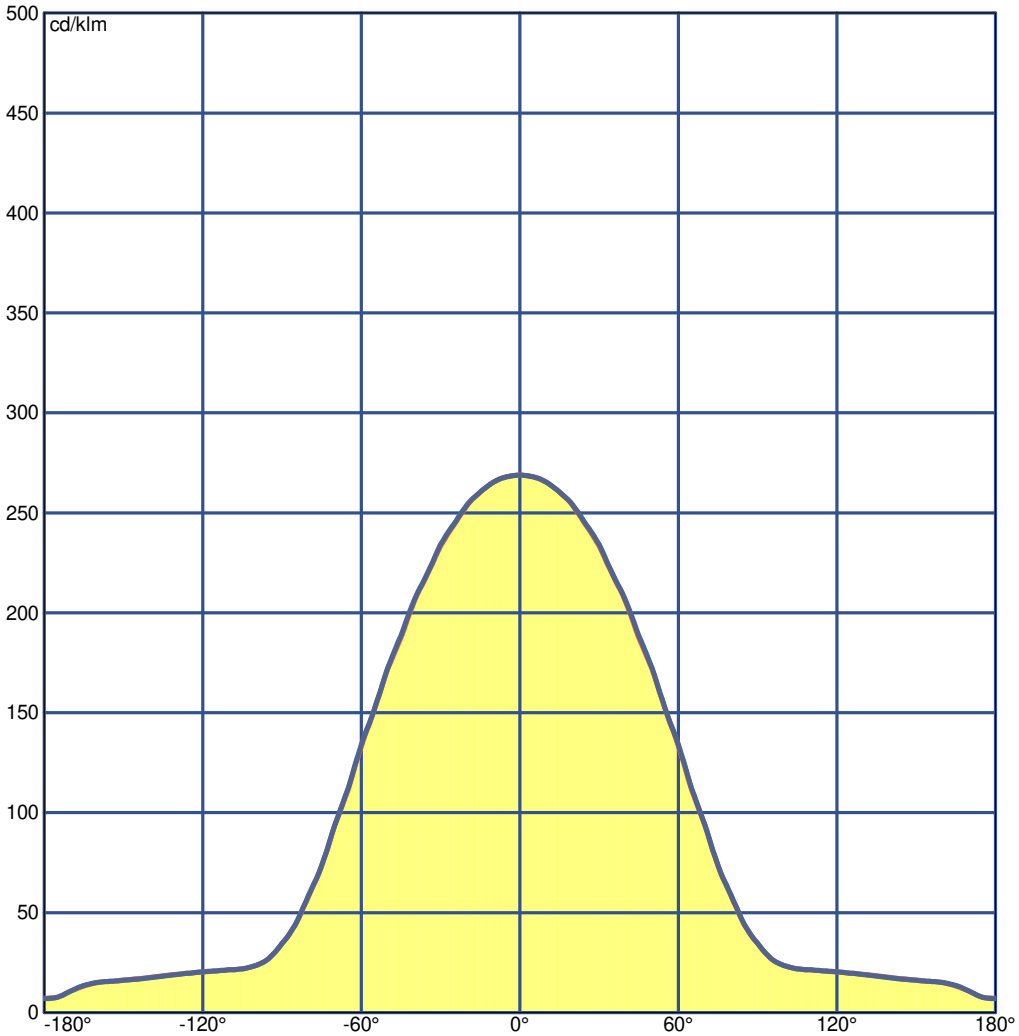

Luminaire
Code DE-0513-BLA
Name OLRA
Measurem.
Code DE-0513-BLA
Name OLRA

Luminaire Flux	1965.32 lm	Luminaire Power	24.20 W	Efficacy	81.21 lm/W	Efficiency	100.00%
Sources Flux	1965.33 lm	Maximum value	268.88 cd/klm	Position	C=0.00 G=0.00	CG	Double Symmetrical

UGR
S = 0.250

Reflectancies										
Ceiling/Cavity	0.7	0.7	0.5	0.5	0.3	0.7	0.7	0.5	0.5	0.3
Walls	0.5	0.3	0.5	0.3	0.3	0.5	0.3	0.5	0.3	0.3
WorkingPlane	0.2	0.2	0.2	0.2	0.2	0.2	0.2	0.2	0.2	0.2
RoomDimensions	Viewed Crosswise					Viewed Endwise				
x=2H y=2H	18.7	19.9	19.2	20.4	20.9	18.7	19.9	19.2	20.4	20.9
x=2H y=3H	20.4	21.5	20.9	22.0	22.5	20.4	21.5	20.9	22.0	22.5
x=2H y=4H	21.1	22.2	21.6	22.6	23.2	21.1	22.2	21.7	22.7	23.2
x=2H y=6H	21.8	22.7	22.3	23.2	23.8	21.8	22.8	22.3	23.3	23.9
x=2H y=8H	22.0	23.0	22.6	23.5	24.1	22.1	23.0	22.6	23.6	24.2
x=2H y=12H	22.3	23.2	22.9	23.8	24.4	22.3	23.2	22.9	23.8	24.4
x=4H y=2H	19.4	20.5	20.0	21.0	21.5	19.4	20.5	20.0	21.0	21.6
x=4H y=3H	21.3	22.2	21.9	22.7	23.3	21.3	22.2	21.9	22.7	23.3
x=4H y=4H	22.1	22.9	22.7	23.5	24.1	22.2	23.0	22.7	23.5	24.2
x=4H y=6H	22.9	23.6	23.5	24.2	24.9	23.0	23.7	23.6	24.3	24.9
x=4H y=8H	23.3	24.0	23.9	24.6	25.3	23.3	24.0	24.0	24.6	25.3
x=4H y=12H	23.7	24.2	24.3	24.9	25.6	23.7	24.3	24.3	24.9	25.6
x=8H y=4H	22.5	23.2	23.1	23.8	24.5	22.5	23.2	23.2	23.8	24.5
x=8H y=6H	23.5	24.0	24.1	24.7	25.4	23.5	24.1	24.2	24.7	25.4
x=8H y=8H	24.0	24.5	24.7	25.1	25.9	24.0	24.5	24.7	25.2	25.9
x=8H y=12H	24.5	24.9	25.1	25.6	26.3	24.5	24.9	25.2	25.6	26.4
x=12H y=4H	22.6	23.2	23.2	23.8	24.5	22.6	23.2	23.2	23.8	24.5
x=12H y=6H	23.6	24.1	24.3	24.7	25.5	23.7	24.1	24.3	24.8	25.5
x=12H y=8H	24.2	24.6	24.8	25.3	26.0	24.2	24.6	24.9	25.3	26.1

Luminaire
Code DE-0513-BLA
Name OLRA
Measurem.
Code DE-0513-BLA
Name OLRA

Luminaire Flux	1965.32 lm	Luminaire Power	24.20 W	Efficacy	81.21 lm/W	Efficiency	100.00%
Sources Flux	1965.33 lm	Maximum value	268.88 cd/klm	Position	C=0.00 G=0.00	CG	Double Symmetrical

Total Flux=1965.33 Luminaire Flux=1965.32

RI	0.60	0.80	1.00	1.25	1.50	2.00	2.50	3.00	4.00	5.00	10.00	20.00
DRR	0.27	0.35	0.42	0.49	0.55	0.63	0.69	0.73	0.78	0.82	0.90	0.94
RC	6	6	6	6	6	6	6	6	6	6	6	6

Zonal Flux per 1000 Lumen

Y°	10	20	30	40	50	60	70	80	90	100	110	120	130	140	150	160	170	180
ZF(Y)	25	99	212	349	494	631	742	821	871	902	925	946	963	978	988	995	999	1000

CIE Flux Codes
42 72 91 87 100

C.I.E.	6	LOR	99.99933 %
D DIN 5040	B31	ULOR	12.92109 %
F UTE	0.87 G + 0.13 T	DLOR	87.07825 %
B NBN	BZ 5	UFF	12.92117 %
RN	12.92117 %	DFF	87.07883 %
BLF	1.0	FFR	14.83848 %

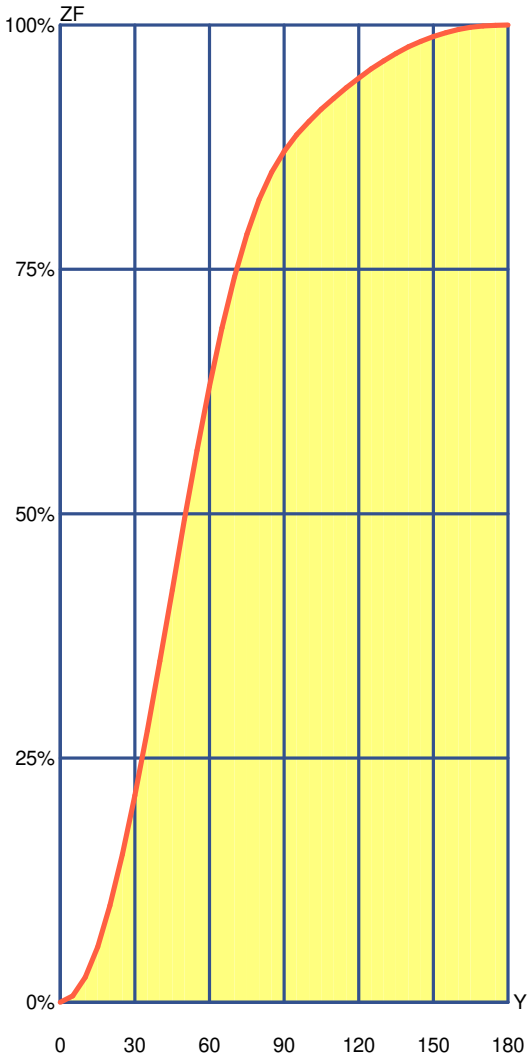

Zonal Flux				
Gamma °	Flux	Sum lm	Flux [%]	Sum [%]
0°	0.00	0.00	0.00%	0.00 %
5°	6.42	6.42	0.64 %	0.64 %
10°	19.07	25.49	1.91 %	2.55 %
15°	31.18	56.67	3.12 %	5.67 %
20°	42.34	99.01	4.23 %	9.90 %
25°	52.18	151.19	5.22 %	15.12 %
30°	60.37	211.56	6.04 %	21.16 %
35°	66.64	278.20	6.66 %	27.82 %
40°	70.84	349.04	7.08 %	34.90 %
45°	72.84	421.88	7.28 %	42.19 %
50°	72.62	494.49	7.26 %	49.45 %
55°	70.24	564.74	7.02 %	56.47 %
60°	65.87	630.60	6.59 %	63.06 %
65°	59.65	690.25	5.97 %	69.03 %
70°	52.06	742.31	5.21 %	74.23 %
75°	43.69	786.00	4.37 %	78.60 %
80°	35.36	821.36	3.54 %	82.14 %
85°	27.84	849.20	2.78 %	84.92 %
90°	21.58	870.78	2.16 %	87.08 %
95°	16.92	887.70	1.69 %	88.77 %
100°	13.86	901.56	1.39 %	90.16 %
105°	12.17	913.74	1.22 %	91.37 %
110°	11.31	925.04	1.13 %	92.50 %
115°	10.68	935.72	1.07 %	93.57 %
120°	10.01	945.74	1.00 %	94.57 %
125°	9.26	954.99	0.93 %	95.50 %
130°	8.44	963.43	0.84 %	96.34 %
135°	7.56	970.99	0.76 %	97.10 %
140°	6.66	977.65	0.67 %	97.77 %
145°	5.75	983.40	0.57 %	98.34 %
150°	4.86	988.26	0.49 %	98.83 %
155°	4.00	992.26	0.40 %	99.23 %
160°	3.17	995.43	0.32 %	99.54 %
165°	2.30	997.73	0.23 %	99.77 %
170°	1.42	999.15	0.14 %	99.92 %
175°	0.67	999.82	0.07 %	99.98 %
180°	0.18	999.99	0.02 %	100.00 %

Luminaire
Code DE-0513-BLA
Name OLRA
Measurem.
Code DE-0513-BLA
Name OLRA

Luminaire Flux	1965.32 lm	Luminaire Power	24.20 W	Efficacy	81.21 lm/W	Efficiency	100.00%
Sources Flux	1965.33 lm	Maximum value	268.88 cd/klm	Position	C=0.00 G=0.00	CG	Double Symmetrical

Utilizations CIE

Mounting Direct Normalization Normalised Suspension Ratio 1/3 Standard CIE Settings

Ceiling

K	8873	8773	8871	8771	7773	7771	7753	7553	7751	7551	7731	7331	7711	7111	5551	5531	5331	5511	5111	3331	3311	1111	0000
0.60	307	276	265	239	263	228	191	162	170	145	130	98	102	69	135	105	93	83	66	88	70	60	48
0.80	349	320	286	263	304	252	227	198	191	168	148	118	116	85	157	123	111	97	81	106	84	74	57
1.00	377	351	294	275	334	263	255	227	204	184	161	132	126	97	172	137	125	109	93	119	95	85	65
1.25	401	378	297	282	360	270	282	256	215	197	172	146	137	110	185	149	139	121	105	132	107	97	72
1.50	419	398	297	284	379	273	304	280	221	205	180	157	146	121	193	159	149	130	116	142	118	107	78
2.00	441	423	291	282	404	272	336	315	228	215	191	172	160	138	204	172	164	145	132	157	133	123	86
2.50	454	440	286	278	420	270	359	340	231	221	198	182	170	150	210	181	174	156	145	167	145	135	92
3.00	464	451	281	275	431	267	377	359	233	224	203	189	177	160	214	188	181	165	154	175	154	144	97
4.00	477	467	274	269	447	263	401	386	235	228	210	199	188	173	219	197	192	177	168	185	167	158	103
5.00	485	477	269	265	456	259	416	404	236	230	215	205	195	183	222	203	198	185	177	192	176	167	108
10.00	500	496	256	254	476	250	452	445	237	234	224	219	212	204	227	215	213	204	199	207	196	190	117
20.00	508	506	247	246	486	243	472	469	235	234	228	226	221	218	228	221	220	215	212	215	209	203	123

Wall

K	8873	8773	8871	8771	7773	7771	7753	7553	7751	7551	7731	7331	7711	7111	5551	5531	5331	5511	5111	3331	3311	1111	0000
0.60	458	441	405	392	432	385	340	327	311	300	260	248	224	213	294	250	245	217	211	242	212	208	190
0.80	523	506	450	438	493	429	401	386	358	346	307	293	269	256	338	293	288	259	253	284	253	248	225
1.00	569	552	479	467	535	457	447	431	390	379	341	326	302	288	368	325	320	292	284	314	283	277	252
1.25	611	595	503	493	575	481	491	475	420	409	373	359	335	321	396	356	350	323	315	343	313	305	277
1.50	643	627	520	511	605	499	526	510	443	433	398	384	362	347	418	380	374	348	340	365	337	328	297
2.00	682	668	537	530	643	516	572	557	469	460	430	417	397	382	443	409	404	381	373	393	368	356	322
2.50	708	696	548	542	668	528	605	591	487	479	452	440	422	408	460	430	426	404	397	412	390	377	339
3.00	727	716	555	550	686	536	630	616	499	493	468	457	440	427	472	446	441	422	415	426	406	392	352
4.00	758	750	570	567	717	552	670	658	523	517	496	487	472	461	495	473	469	452	446	452	434	419	376
5.00	782	775	584	581	741	567	700	689	541	537	518	510	497	487	514	494	491	476	470	473	457	440	395
10.00	848	844	626	624	806	610	780	774	595	592	580	576	566	560	567	555	553	543	539	531	521	501	451
20.00	896	894	661	660	854	646	839	835	637	636	628	626	620	616	610	602	601	595	593	578	572	549	497

Working Pl.

K	8873	8773	8871	8771	7773	7771	7753	7553	7751	7551	7731	7331	7711	7111	5551	5531	5331	5511	5111	3331	3311	1111	0000
0.60	540	522	504	489	511	480	399	386	385	373	320	307	273	262	366	308	303	265	260	300	260	256	238
0.80	644	624	593	578	607	565	494	477	471	458	404	388	353	338	446	387	381	341	334	374	333	326	308
1.00	726	705	661	647	684	631	572	554	541	527	474	456	422	405	511	453	446	407	399	438	396	387	368
1.25	803	783	724	711	757	692	650	630	609	594	544	525	492	473	574	519	512	474	464	500	460	448	428
1.50	862	843	770	758	812	738	711	690	660	646	598	579	547	527	623	570	563	526	516	548	509	496	475
2.00	948	930	835	825	894	803	803	783	736	724	681	663	635	614	695	649	642	609	598	622	588	570	549
2.50	1000	989	876	868	947	844	867	848	787	776	737	720	695	675	743	702	695	666	655	672	642	621	599
3.00	1000	1000	905	897	986	873	914	896	823	812	778	762	739	720	778	741	734	708	698	709	681	657	636
4.00	1000	1000	940	934	1000	910	975	959	868	860	831	817	797	780	822	791	785	762	753	755	732	704	683
5.00	1000	1000	962	957	1000	932	1000	1000	896	889	864	852	834	819	849	822	817	797	789	785	764	734	713
10.00	1000	1000	1000	1000	1000	979	1000	1000	958	954	939	932	920	911	910	893	891	878	873	852	839	802	781
20.00	1000	1000	1000	1000	1000	1000	1000	1000	993	991	982	978	972	966	944	935	934	926	923	891	883	843	821

LM53 SHR C0-C180: 1.274 SHR C90-C270: 1.286 SHR Square: 1.414

Luminaire
Code DE-0513-BLA
Name OLRA
Measurem.
Code DE-0513-BLA
Name OLRA

Luminaire Flux	1965.32 lm	Luminaire Power	24.20 W	Efficacy	81.21 lm/W	Efficiency	100.00%
Sources Flux	1965.33 lm	Maximum value	268.88 cd/klm	Position	C=0.00 G=0.00	CG	Double Symmetrical

Width at 50.00 % of Max Intensity

H[m]	1.00	2.00	3.00	4.00	5.00	H[m]	1.00	2.00	3.00	4.00	5.00
OA	1.71	3.42	5.13	6.84	8.55	OC	1.72	3.45	5.17	6.89	8.61
OB	1.71	3.42	5.13	6.84	8.55	OD	1.72	3.45	5.17	6.89	8.61

Luminous Intensities [cd/klm]

	0	5	15	25	35	45	55	65	75	85
OA	528.44	526.67	511.53	479.10	430.66	368.61	297.93	219.37	143.93	86.15
OB	528.44	526.67	511.53	479.10	430.66	368.61	297.93	219.37	143.93	86.15
OC	528.44	526.63	511.77	480.14	431.56	370.67	298.54	220.60	144.47	86.50
OD	528.44	526.63	511.77	480.14	431.56	370.67	298.54	220.60	144.47	86.50

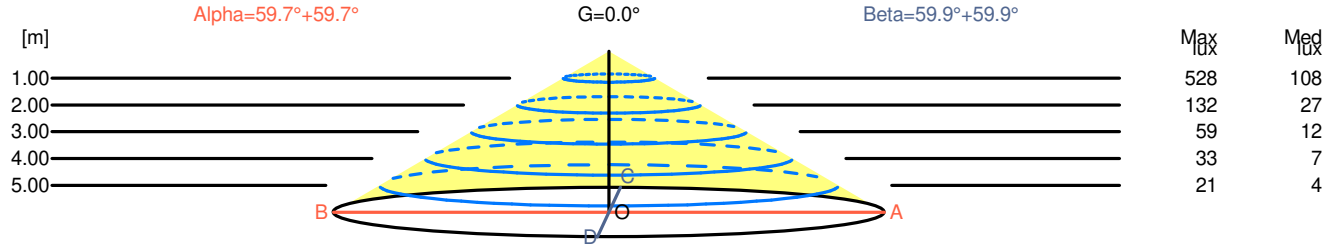

H[m]	D[m]	Max lux	Med lux	Alpha=59.7°+59.7° G=0.0
1.00	3.42	528	108	
2.00	6.84	132	27	
3.00	10.27	59	12	
4.00	13.69	33	7	
5.00	17.11	21	4	

H[m]	D[m]	Max lux	Med lux	Beta=59.9°+59.9° G=0.0
1.00	3.45	528	108	
2.00	6.89	132	27	
3.00	10.34	59	12	
4.00	13.78	33	7	
5.00	17.23	21	4	

Luminaire
Code DE-0513-BLA
Name OLRA
Measurem.
Code DE-0513-BLA
Name OLRA

Luminaire Flux	1965.32 lm	Luminaire Power	24.20 W	Efficacy	81.21 lm/W	Efficiency	100.00%
Sources Flux	1965.33 lm	Maximum value	268.88 cd/klm	Position	C=0.00 G=0.00	CG	Double Symmetrical

Isolux (Floor)

Luminaire position X=0.00m Y=0.00m Z=2.50m

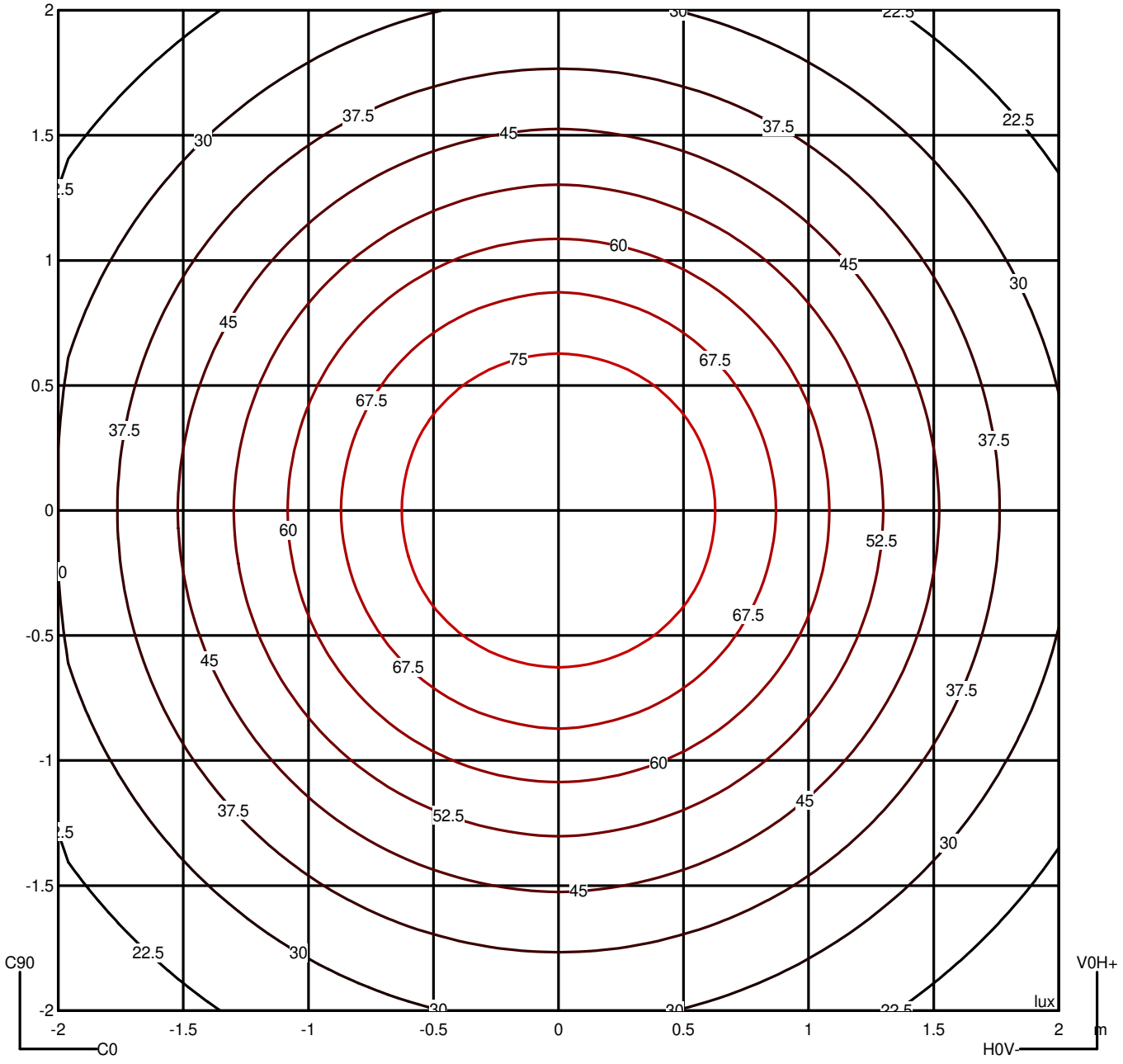

Luminaire
Code DE-0513-BLA
Name OLRA
Measurem.
Code DE-0513-BLA
Name OLRA

Luminaire Flux	1965.32 lm	Luminaire Power	24.20 W	Efficacy	81.21 lm/W	Efficiency	100.00%
Sources Flux	1965.33 lm	Maximum value	268.88 cd/klm	Position	C=0.00 G=0.00	CG	Double Symmetrical

Luminance

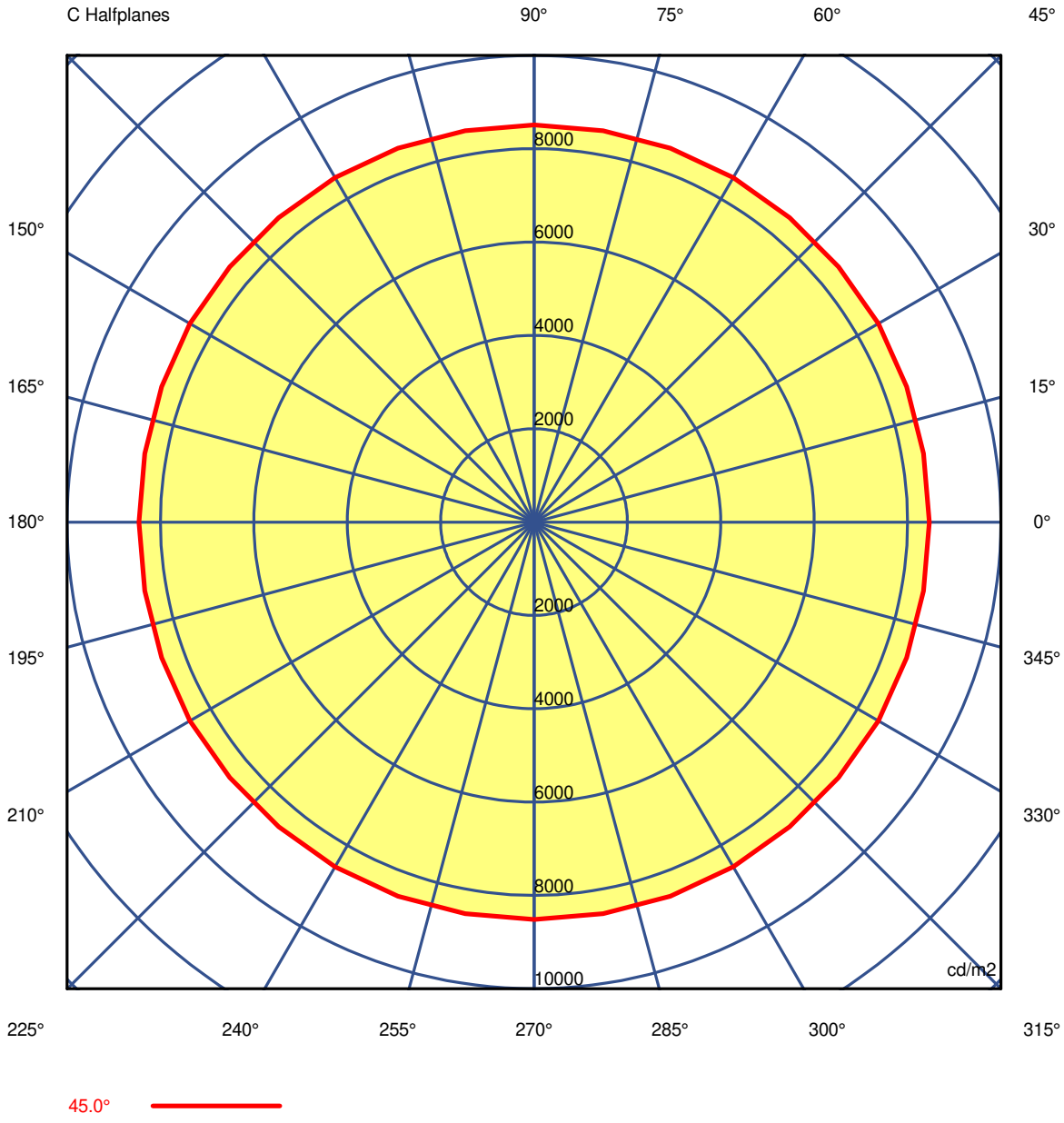

Luminaire
Code DE-0513-BLA
Name OLRA
Measurem.
Code DE-0513-BLA
Name OLRA

Luminaire Flux	1965.32 lm	Luminaire Power	24.20 W	Efficacy	81.21 lm/W	Efficiency	100.00%
Sources Flux	1965.33 lm	Maximum value	268.88 cd/klm	Position	C=0.00 G=0.00	CG	Double Symmetrical

Luminance cd/m2 **Table 1/3**

	C 0.00	C 10.00	C 20.00	C 30.00	C 40.00	C 50.00	C 60.00	C 70.00	C 80.00	C 90.00	C 100.00	C 110.00	C 120.00
G 0.0	10765.21	10765.21	10765.21	10765.21	10765.21	10765.21	10765.21	10765.21	10765.21	10765.21	10765.21	10765.21	10765.21
G 5.0	10535.57	10537.66	10536.52	10534.12	10535.37	10536.42	10535.39	10534.33	10534.17	10534.78	10534.17	10534.33	10535.39
G 10.0	10319.77	10317.95	10317.42	10317.35	10316.26	10316.63	10317.41	10315.35	10316.67	10323.13	10316.67	10315.35	10317.41
G 15.0	10099.24	10100.08	10104.64	10113.20	10113.27	10109.81	10105.67	10099.59	10098.59	10104.07	10098.59	10099.59	10105.67
G 20.0	9885.72	9874.95	9870.04	9871.00	9873.27	9876.79	9878.24	9876.48	9881.27	9901.59	9881.27	9876.48	9878.24
G 25.0	9626.02	9628.80	9636.55	9649.93	9652.43	9649.01	9644.85	9641.05	9641.73	9647.08	9641.73	9641.05	9644.85
G 30.0	9401.83	9385.55	9376.71	9375.39	9376.19	9380.30	9382.87	9382.49	9393.52	9431.17	9393.52	9382.49	9382.87
G 35.0	9089.44	9091.05	9100.18	9114.35	9124.16	9131.69	9132.46	9118.94	9110.91	9108.50	9110.91	9118.94	9132.46
G 40.0	8850.32	8833.25	8817.76	8807.21	8805.15	8808.80	8812.08	8817.56	8835.20	8880.18	8835.20	8817.56	8812.08
G 45.0	8464.26	8470.32	8489.95	8511.76	8511.90	8516.52	8529.27	8528.89	8520.74	8511.59	8520.74	8528.89	8529.27
G 50.0	8205.67	8181.25	8161.42	8148.24	8141.36	8140.51	8143.94	8152.48	8182.67	8234.20	8182.67	8152.48	8143.94
G 55.0	7759.54	7746.55	7757.60	7789.03	7812.47	7811.49	7803.08	7816.51	7811.79	7775.59	7811.79	7816.51	7803.08
G 60.0	7404.67	7416.90	7405.71	7371.71	7340.05	7337.11	7353.00	7357.66	7384.06	7441.46	7384.06	7357.66	7353.00
G 65.0	6839.38	6847.94	6866.38	6896.62	6927.33	6928.01	6916.17	6935.91	6929.61	6877.86	6929.61	6935.91	6916.17
G 70.0	6443.53	6439.41	6424.91	6390.71	6363.29	6358.97	6375.09	6396.29	6425.26	6461.91	6425.26	6396.29	6375.09
G 75.0	5808.39	5811.43	5820.61	5863.03	5949.25	5949.32	5892.22	5928.84	5926.93	5830.40	5926.93	5928.84	5892.22
G 80.0	5475.75	5505.44	5486.23	5436.11	5420.27	5429.11	5452.89	5492.71	5512.52	5519.41	5512.52	5492.71	5452.89
G 85.0	5148.96	5152.92	5164.82	5184.68	5280.58	5286.07	5227.90	5278.48	5281.01	5170.31	5281.01	5278.48	5227.90
G 90.0	5414.30	5441.55	5403.98	5345.36	5368.52	5377.68	5372.85	5445.26	5475.36	5419.72	5475.36	5445.26	5372.85

Luminaire
Code DE-0513-BLA
Name OLRA
Measurem.
Code DE-0513-BLA
Name OLRA

Luminaire Flux	1965.32 lm	Luminaire Power	24.20 W	Efficacy	81.21 lm/W	Efficiency	100.00%
Sources Flux	1965.33 lm	Maximum value	268.88 cd/klm	Position	C=0.00 G=0.00	CG	Double Symmetrical

Luminance cd/m2 **Table 2/3**

	C 130.00	C 140.00	C 150.00	C 160.00	C 170.00	C 180.00	C 190.00	C 200.00	C 210.00	C 220.00	C 230.00	C 240.00	C 250.00
G 0.0	10765.21	10765.21	10765.21	10765.21	10765.21	10765.21	10765.21	10765.21	10765.21	10765.21	10765.21	10765.21	10765.21
G 5.0	10536.42	10535.37	10534.12	10536.52	10537.66	10535.57	10537.66	10536.52	10534.12	10535.37	10536.42	10535.39	10534.33
G 10.0	10316.63	10316.26	10317.35	10317.42	10317.95	10319.77	10317.95	10317.42	10317.35	10316.26	10316.63	10317.41	10315.35
G 15.0	10109.81	10113.27	10113.20	10104.64	10100.08	10099.24	10100.08	10104.64	10113.20	10113.27	10109.81	10105.67	10099.59
G 20.0	9876.79	9873.27	9871.00	9870.04	9874.95	9885.72	9874.95	9870.04	9871.00	9873.27	9876.79	9878.24	9876.48
G 25.0	9649.01	9652.43	9649.93	9636.55	9628.80	9626.02	9628.80	9636.55	9649.93	9652.43	9649.01	9644.85	9641.05
G 30.0	9380.30	9376.19	9375.39	9376.71	9385.55	9401.83	9385.55	9376.71	9375.39	9376.19	9380.30	9382.87	9382.49
G 35.0	9131.69	9124.16	9114.35	9100.18	9091.05	9089.44	9091.05	9100.18	9114.35	9124.16	9131.69	9132.46	9118.94
G 40.0	8808.80	8805.15	8807.21	8817.76	8833.25	8850.32	8833.25	8817.76	8807.21	8805.15	8808.80	8812.08	8817.56
G 45.0	8516.52	8511.90	8511.76	8489.95	8470.32	8464.26	8470.32	8489.95	8511.76	8511.90	8516.52	8529.27	8528.89
G 50.0	8140.51	8141.36	8148.24	8161.42	8181.25	8205.67	8181.25	8161.42	8148.24	8141.36	8140.51	8143.94	8152.48
G 55.0	7811.49	7812.47	7789.03	7757.60	7746.55	7759.54	7746.55	7757.60	7789.03	7812.47	7811.49	7803.08	7816.51
G 60.0	7337.11	7340.05	7371.71	7405.71	7416.90	7404.67	7416.90	7405.71	7371.71	7340.05	7337.11	7353.00	7357.66
G 65.0	6928.01	6927.33	6896.62	6866.38	6847.94	6839.38	6847.94	6866.38	6896.62	6927.33	6928.01	6916.17	6935.91
G 70.0	6358.97	6363.29	6390.71	6424.91	6439.41	6443.53	6439.41	6424.91	6390.71	6363.29	6358.97	6375.09	6396.29
G 75.0	5949.32	5949.25	5863.03	5820.61	5811.43	5808.39	5811.43	5820.61	5863.03	5949.25	5949.32	5892.22	5928.84
G 80.0	5429.11	5420.27	5436.11	5486.23	5505.44	5475.75	5505.44	5486.23	5436.11	5420.27	5429.11	5452.89	5492.71
G 85.0	5286.07	5280.58	5184.68	5164.82	5152.92	5148.96	5152.92	5164.82	5184.68	5280.58	5286.07	5227.90	5278.48
G 90.0	5377.68	5368.52	5345.36	5403.98	5441.55	5414.30	5441.55	5403.98	5345.36	5368.52	5377.68	5372.85	5445.26

Luminaire
Code DE-0513-BLA
Name OLRA
Measurem.
Code DE-0513-BLA
Name OLRA

Luminaire Flux	1965.32 lm	Luminaire Power	24.20 W	Efficacy	81.21 lm/W	Efficiency	100.00%
Sources Flux	1965.33 lm	Maximum value	268.88 cd/klm	Position	C=0.00 G=0.00	CG	Double Symmetrical

Luminance cd/m2 **Table 3/3**

	C 260.00	C 270.00	C 280.00	C 290.00	C 300.00	C 310.00	C 320.00	C 330.00	C 340.00	C 350.00
G 0.0	10765.21	10765.21	10765.21	10765.21	10765.21	10765.21	10765.21	10765.21	10765.21	10765.21
G 5.0	10534.17	10534.78	10534.17	10534.33	10535.39	10536.42	10535.37	10534.12	10536.52	10537.66
G 10.0	10316.67	10323.13	10316.67	10315.35	10317.41	10316.63	10316.26	10317.35	10317.42	10317.95
G 15.0	10098.59	10104.07	10098.59	10099.59	10105.67	10109.81	10113.27	10113.20	10104.64	10100.08
G 20.0	9881.27	9901.59	9881.27	9876.48	9878.24	9876.79	9873.27	9871.00	9870.04	9874.95
G 25.0	9641.73	9647.08	9641.73	9641.05	9644.85	9649.01	9652.43	9649.93	9636.55	9628.80
G 30.0	9393.52	9431.17	9393.52	9382.49	9382.87	9380.30	9376.19	9375.39	9376.71	9385.55
G 35.0	9110.91	9108.50	9110.91	9118.94	9132.46	9131.69	9124.16	9114.35	9100.18	9091.05
G 40.0	8835.20	8880.18	8835.20	8817.56	8812.08	8808.80	8805.15	8807.21	8817.76	8833.25
G 45.0	8520.74	8511.59	8520.74	8528.89	8529.27	8516.52	8511.90	8511.76	8489.95	8470.32
G 50.0	8182.67	8234.20	8182.67	8152.48	8143.94	8140.51	8141.36	8148.24	8161.42	8181.25
G 55.0	7811.79	7775.59	7811.79	7816.51	7803.08	7811.49	7812.47	7789.03	7757.60	7746.55
G 60.0	7384.06	7441.46	7384.06	7357.66	7353.00	7337.11	7340.05	7371.71	7405.71	7416.90
G 65.0	6929.61	6877.86	6929.61	6935.91	6916.17	6928.01	6927.33	6896.62	6866.38	6847.94
G 70.0	6425.26	6461.91	6425.26	6396.29	6375.09	6358.97	6363.29	6390.71	6424.91	6439.41
G 75.0	5926.93	5830.40	5926.93	5928.84	5892.22	5949.32	5949.25	5863.03	5820.61	5811.43
G 80.0	5512.52	5519.41	5512.52	5492.71	5452.89	5429.11	5420.27	5436.11	5486.23	5505.44
G 85.0	5281.01	5170.31	5281.01	5278.48	5227.90	5286.07	5280.58	5184.68	5164.82	5152.92
G 90.0	5475.36	5419.72	5475.36	5445.26	5372.85	5377.68	5368.52	5345.36	5403.98	5441.55

Olra

DE-0513

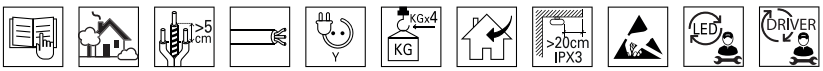

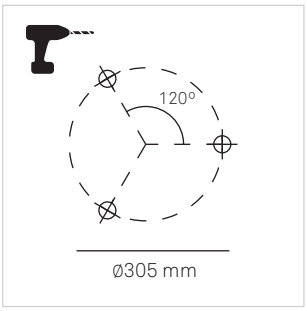

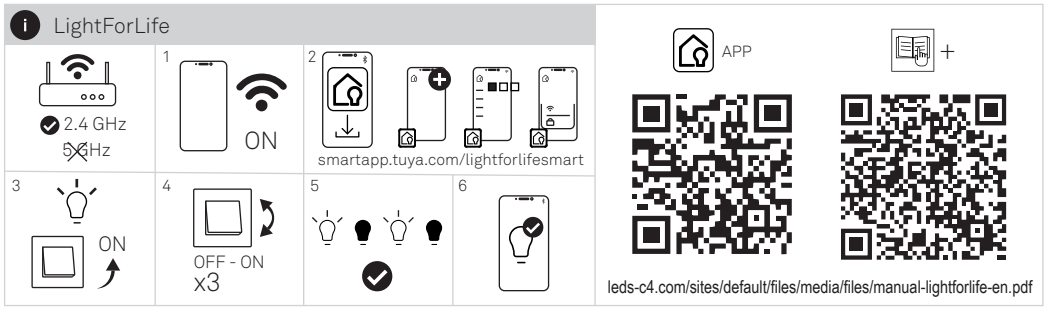

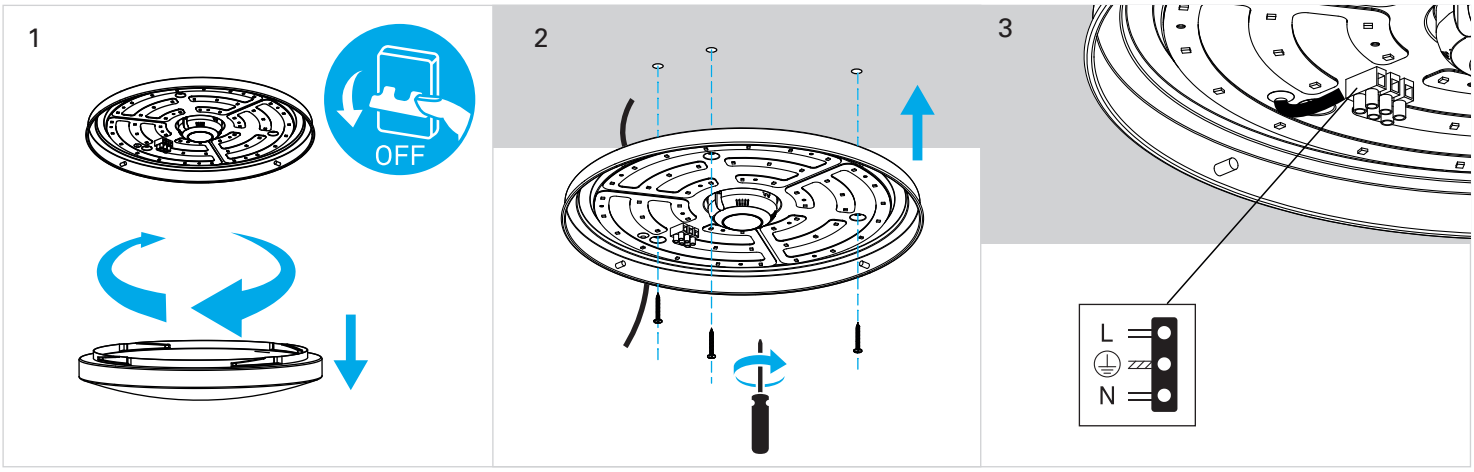

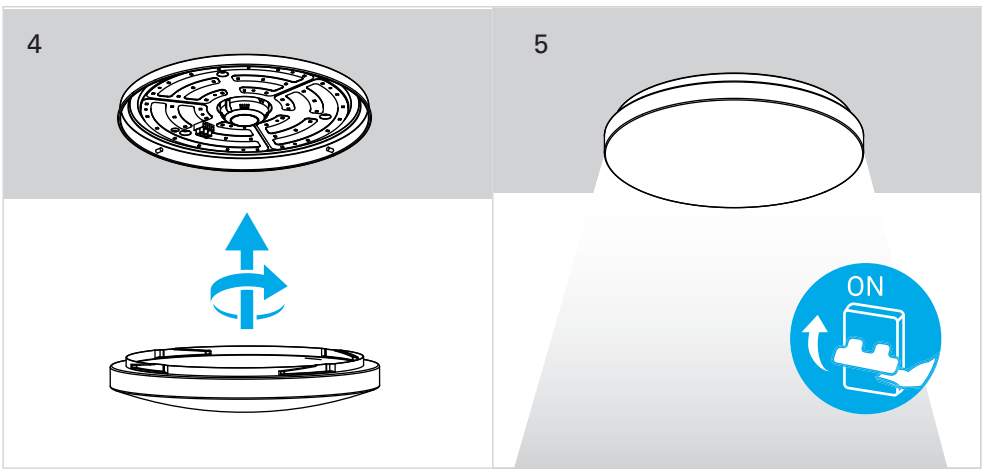

23-3-2022