FORD

PX-0247-NEG

Plafón LED 3.000K con IP65 y driver incluido. Diseño elegante y limpio, sin tornillería vista, válido tanto para interior como para exterior. Fabricado íntegramente en plástico para poder ser instalado en ambientes con atmósfera marina.



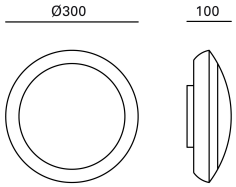

CARACTERÍSTICAS TÉCNICAS

IP65 IK10

Potencia total luminaria : 12.5W

Lúmenes reales : 895

Lúmenes nominales : 1112

Lm / W reales : 72

Ángulo Ópticas / Reflector : HORIZONTAL 109º

Material de la estructura : Policarbonato + ABS

Acabado estructura : Negro

Material del difusor : Policarbonato

Acabado difusor : Opal

Voltaje / Frecuencia : 100-240V ~ 50/60Hz

Vida útil : 36.000h L70B30

Garantía : 3 Años

Resistencia a la corrosión (ensayo de Niebla Salina Neutra según ISO 9227) : Sí

CARACTERÍSTICAS LUMINOTÉCNICAS

CRI: 80

Riesgo fotobiológico: RG0

Portalámparas	Cantidad	Potencia fuente de luz (W)	Temperatura de color correlacionada (CCT)
LED	1	11W	3000K

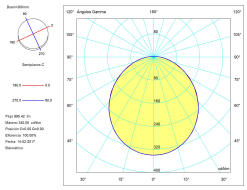

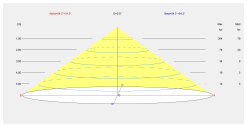

LOGÍSTICA

Peso neto (Kg): 0.95

Peso embalado (Kg): 1.27

Embalaje: 300mm x 105mm x 300mm

6 Un

APLICACIÓN DE LA LUMINARIA

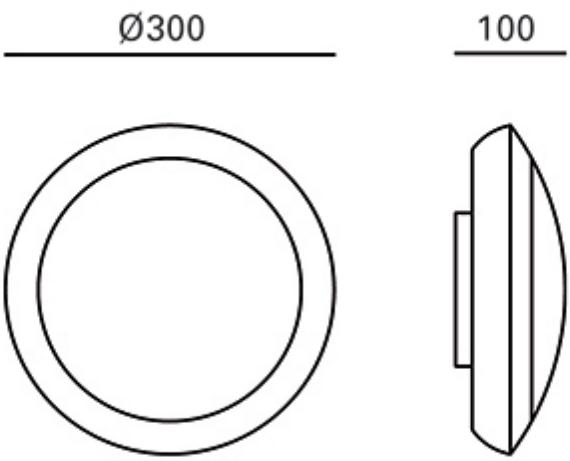

La imagen puede no coincidir con la referencia, LEDS C4 se reserva el derecho de modificación de alguno de los componentes que componen el producto. Los datos relativos al flujo, la potencia y la Temperatura de Color están sujetos a una tolerancia de +- 10%.

Luminaire
Code PX-0247-NEG
Name Plafon FORD leds 12W 3000K
Measurem.
Code CL116A17F033G
Name Plafon FORD leds 12W 3000K

Luminaire Flux	895.42 lm	Luminaire Power	12.28 W	Efficacy	72.92 lm/W	Efficiency	100.00%
Lamps Flux	895.42 lm	Maximum value	340.05 cd/klm	Position	C=0.00 G=0.00	CG	Double Symmetrical

Round Luminaire	Diam. 300 mm	Height	100 mm
Round Luminous Area	Diam. 240 mm	Height	30 mm
Horizontal Luminous Area	0.045239 m2	Emitting area on Plane 180°	0.007200 m2
Emitting area on Plane 0°	0.007200 m2	Emitting area on Plane 270°	0.007200 m2
Emitting area on Plane 90°	0.007200 m2	Glare area at 76°	0.017930 m2
Coordinate system	CG	Symmetry Type	Double Symmetrical
Date	06-02-2017	Maximum Gamma Angle	180
Measurement Distance	0.00	Measurement Flux	895.42 lm
Operator	Asselum T2	Source Voltage [V]	
Temperature	25.00 °C	Source current [A]	
Humidity	60.00 %	Photocell	
Notes			

Luminaire Lamps

Line	Code	Name	Flux [lm]	Pow. [W]	Q.ty
	PX-0247-NEG	PX-0247-NEG	895.42	12.28	1

C.I.E.	46 76 93 97 100	D DIN 5040	A31
F UTE	0.97 E + 0.03 T	B NBN	BZ 5

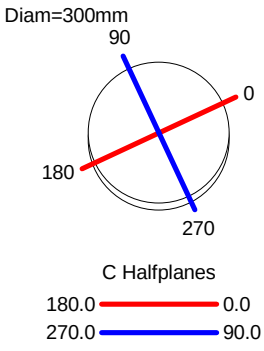

ULOR 2.71 %
DLOR 97.29 %
RN 2.71 %

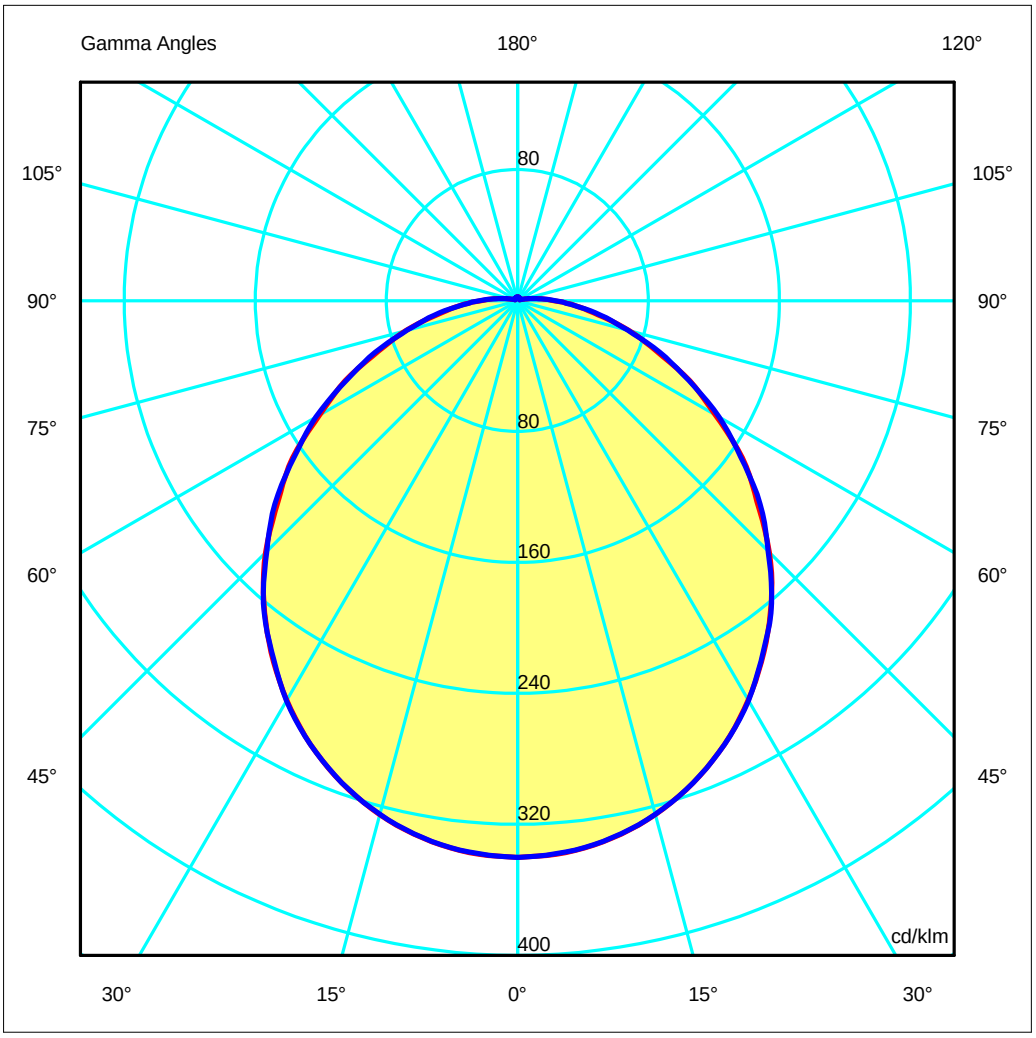

Luminaire
Code PX-0247-NEG
Name Plafon FORD leds 12W 3000K
Measurem.
Code CL116A17F033G
Name Plafon FORD leds 12W 3000K

Luminaire Flux	895.42 lm	Luminaire Power	12.28 W	Efficacy	72.92 lm/W	Efficiency	100.00%
Lamps Flux	895.42 lm	Maximum value	340.05 cd/klm	Position	C=0.00 G=0.00	CG	Double Symmetrical

Luminous Intensity Table cd/klm **Table 1/1**

	C 0.00	C 15.00	C 30.00	C 45.00	C 60.00	C 75.00	C 90.00
G 0.0	340.05	340.05	340.05	340.05	340.05	340.05	340.05
G 5.0	338.44	338.28	338.28	338.32	338.33	338.23	338.14
G 10.0	333.35	333.22	333.25	333.30	333.32	333.23	333.15
G 15.0	325.03	324.76	324.62	324.92	324.81	324.81	324.87
G 20.0	313.50	313.28	313.38	313.54	313.46	313.48	313.42
G 25.0	299.08	298.87	298.43	299.00	298.52	298.97	299.12
G 30.0	281.74	281.85	281.72	282.06	282.04	282.12	282.04
G 35.0	262.27	262.17	261.63	262.56	261.67	262.64	261.72
G 40.0	240.92	240.74	240.93	241.24	241.09	240.96	241.38
G 45.0	217.50	217.54	216.86	217.67	216.88	217.85	216.47
G 50.0	190.90	192.91	192.98	192.61	193.25	193.16	193.40
G 55.0	167.64	167.17	166.34	167.71	166.40	167.85	166.35
G 60.0	139.19	141.56	141.70	141.11	141.81	141.63	142.11
G 65.0	116.12	115.95	115.24	116.27	115.41	116.41	115.20
G 70.0	90.17	92.29	92.15	91.65	92.50	92.16	92.55
G 75.0	70.56	70.59	69.78	70.79	69.90	70.85	69.49
G 80.0	50.00	51.70	51.79	51.55	51.95	51.63	51.87
G 85.0	35.86	35.95	35.45	35.98	34.91	36.08	35.04
G 90.0	22.38	23.43	23.29	23.05	23.42	22.92	23.42
G 95.0	13.63	13.68	13.48	13.89	13.25	13.94	13.24
G100.0	6.64	7.05	7.08	7.09	7.26	7.07	7.40
G105.0	3.27	3.26	3.17	3.32	3.22	3.50	3.37
G110.0	1.63	1.62	1.62	1.65	1.76	1.74	1.81
G115.0	1.45	1.46	1.44	1.46	1.45	1.45	1.42
G120.0	1.52	1.52	1.52	1.52	1.52	1.52	1.52
G125.0	1.62	1.60	1.62	1.62	1.62	1.61	1.62
G130.0	1.71	1.70	1.70	1.71	1.68	1.71	1.71
G135.0	1.81	1.80	1.80	1.80	1.78	1.79	1.78
G140.0	1.89	1.88	1.88	1.89	1.88	1.89	1.87
G145.0	1.96	1.96	1.95	1.94	1.96	1.94	1.96
G150.0	2.05	2.02	2.01	2.04	2.01	2.01	2.01
G155.0	2.07	2.07	2.06	2.09	2.08	2.06	2.06
G160.0	2.15	2.12	2.13	2.14	2.11	2.13	2.11
G165.0	2.20	2.18	2.16	2.18	2.17	2.16	2.16
G170.0	2.25	2.22	2.23	2.23	2.22	2.22	2.21
G175.0	2.29	2.28	2.28	2.27	2.29	2.27	2.26
G180.0	2.31	2.31	2.31	2.31	2.31	2.31	2.31

Luminaire
Code PX-0247-NEG
Name Plafon FORD leds 12W 3000K
Measurem.
Code CL116A17F033G
Name Plafon FORD leds 12W 3000K

Luminaire Flux	895.42 lm	Luminaire Power	12.28 W	Efficacy	72.92 lm/W	Efficiency	100.00%
Lamps Flux	895.42 lm	Maximum value	340.05 cd/klm	Position	C=0.00 G=0.00	CG	Double Symmetrical

Diam=300mm

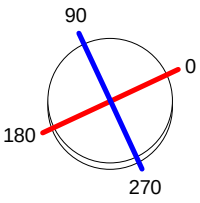

C Halfplanes



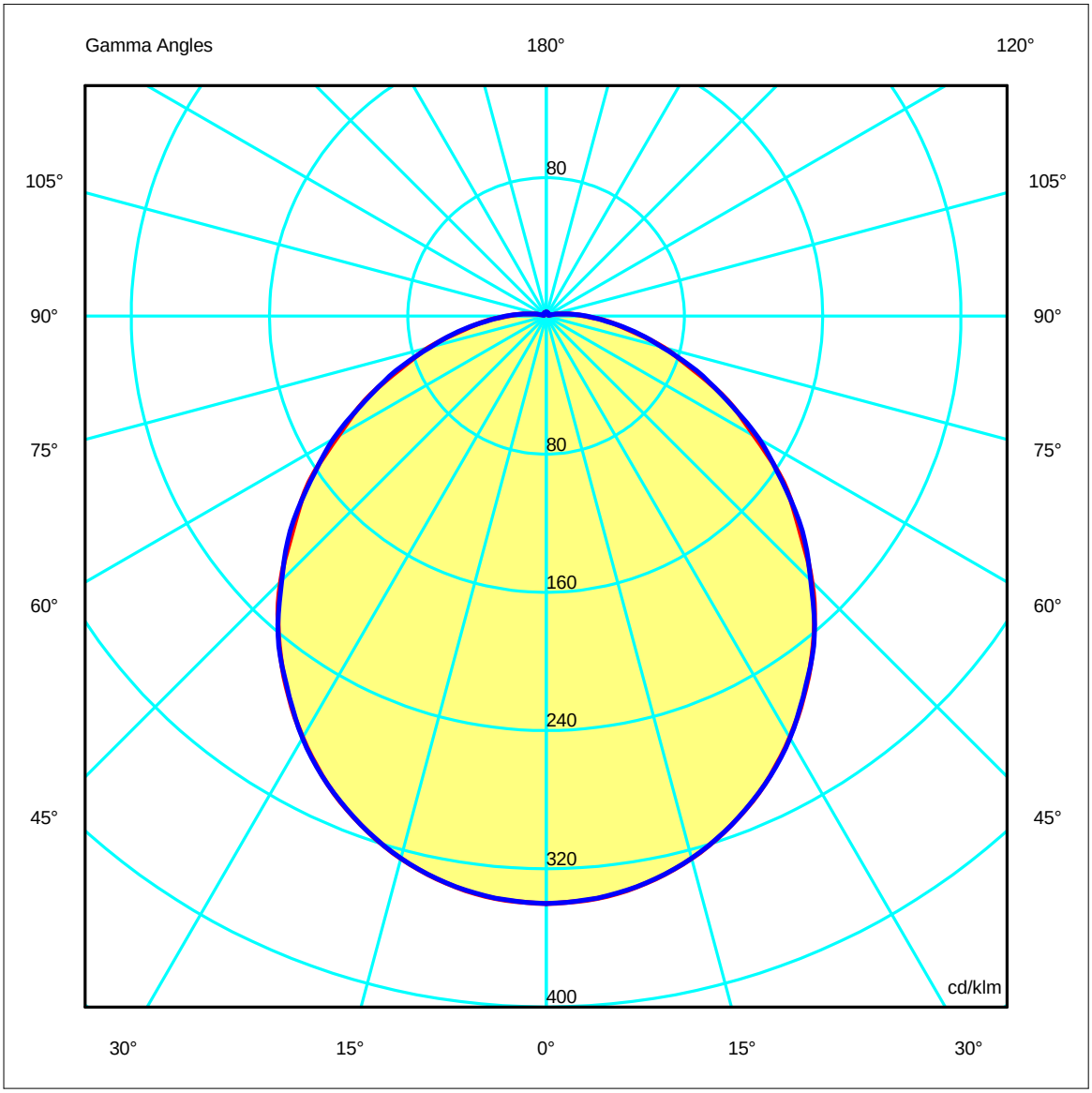

Luminaire
Code PX-0247-NEG
Name Plafon FORD leds 12W 3000K
Measurem.
Code CL116A17F033G
Name Plafon FORD leds 12W 3000K

Luminaire Flux	895.42 lm	Luminaire Power	12.28 W	Efficacy	72.92 lm/W	Efficiency	100.00%
Lamps Flux	895.42 lm	Maximum value	340.05 cd/klm	Position	C=0.00 G=0.00	CG	Double Symmetrical

Width at 50.00 % of Max Intensity

H[m]	1.00	2.00	3.00	4.00	5.00	H[m]	1.00	2.00	3.00	4.00	5.00
OA	1.40	2.81	4.21	5.61	7.02	OC	1.39	2.78	4.18	5.57	6.96
OB	1.40	2.81	4.21	5.61	7.02	OD	1.39	2.78	4.18	5.57	6.96

Luminous Intensities [cd/klm]

	0	5	15	25	35	45	55	65	75	85
OA	304.49	303.05	291.04	267.80	234.84	194.75	150.11	103.98	63.18	32.11
OB	304.49	303.05	291.04	267.80	234.84	194.75	150.11	103.98	63.18	32.11
OC	304.49	302.78	290.89	267.84	234.35	193.83	148.95	103.15	62.22	31.37
OD	304.49	302.78	290.89	267.84	234.35	193.83	148.95	103.15	62.22	31.37

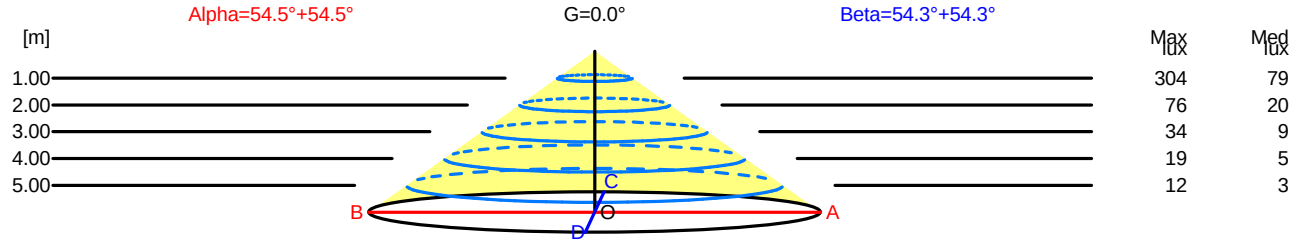

H[m]	D[m]	Max lux	Med lux	Alpha=54.5°+54.5° G=0.0
1.00	2.81	304	79	
2.00	5.61	76	20	
3.00	8.42	34	9	
4.00	11.22	19	5	
5.00	14.03	12	3	

H[m]	D[m]	Max lux	Med lux	Beta=54.3°+54.3° G=0.0
1.00	2.78	304	79	
2.00	5.57	76	20	
3.00	8.35	34	9	
4.00	11.14	19	5	
5.00	13.92	12	3	

Luminaire
Code PX-0247-NEG
Name Plafon FORD leds 12W 3000K
Measurem.
Code CL116A17F033G
Name Plafon FORD leds 12W 3000K

Luminaire Flux	895.42 lm	Luminaire Power	12.28 W	Efficacy	72.92 lm/W	Efficiency	100.00%
Lamps Flux	895.42 lm	Maximum value	340.05 cd/klm	Position	C=0.00 G=0.00	CG	Double Symmetrical

UGR
S = 0.250

Reflectancies										
Ceiling/Cavity	0.7	0.7	0.5	0.5	0.3	0.7	0.7	0.5	0.5	0.3
Walls	0.5	0.3	0.5	0.3	0.3	0.5	0.3	0.5	0.3	0.3
WorkingPlane	0.2	0.2	0.2	0.2	0.2	0.2	0.2	0.2	0.2	0.2
RoomDimensions	ViewedCrosswise					ViewedEndwise				
x=2H y=2H	17.5	18.8	17.8	19.1	19.4	17.5	18.8	17.9	19.1	19.4
x=2H y=3H	19.0	20.2	19.4	20.5	20.9	19.0	20.2	19.4	20.5	20.9
x=2H y=4H	19.7	20.8	20.1	21.1	21.5	19.7	20.8	20.1	21.2	21.5
x=2H y=6H	20.2	21.3	20.6	21.6	22.0	20.3	21.3	20.7	21.7	22.0
x=2H y=8H	20.5	21.5	20.9	21.8	22.3	20.5	21.5	20.9	21.9	22.3
x=2H y=12H	20.7	21.6	21.1	22.0	22.4	20.7	21.7	21.1	22.0	22.4
x=4H y=2H	18.2	19.3	18.6	19.7	20.0	18.2	19.3	18.6	19.7	20.0
x=4H y=3H	19.9	20.9	20.3	21.3	21.7	19.9	20.9	20.4	21.3	21.7
x=4H y=4H	20.7	21.6	21.1	22.0	22.4	20.7	21.6	21.2	22.0	22.4
x=4H y=6H	21.4	22.2	21.9	22.6	23.1	21.4	22.2	21.9	22.6	23.1
x=4H y=8H	21.7	22.4	22.2	22.9	23.4	21.7	22.4	22.2	22.9	23.4
x=4H y=12H	22.0	22.7	22.5	23.1	23.6	22.0	22.7	22.5	23.1	23.6
x=8H y=4H	21.1	21.8	21.5	22.2	22.7	21.1	21.8	21.6	22.2	22.7
x=8H y=6H	22.0	22.5	22.5	23.0	23.5	22.0	22.5	22.5	23.0	23.5
x=8H y=8H	22.4	22.9	22.9	23.4	23.9	22.4	22.9	22.9	23.4	23.9
x=8H y=12H	22.8	23.2	23.3	23.7	24.3	22.8	23.2	23.3	23.8	24.3
x=12H y=4H	21.1	21.8	21.6	22.2	22.7	21.1	21.8	21.6	22.2	22.7
x=12H y=6H	22.1	22.6	22.6	23.1	23.6	22.1	22.6	22.6	23.1	23.6
x=12H y=8H	22.5	23.0	23.1	23.5	24.1	22.6	23.0	23.1	23.5	24.1

Luminaire
Code PX-0247-NEG
Name Plafon FORD leds 12W 3000K
Measurem.
Code CL116A17F033G
Name Plafon FORD leds 12W 3000K

Luminaire Flux	895.42 lm	Luminaire Power	12.28 W	Efficacy	72.92 lm/W	Efficiency	100.00%
Lamps Flux	895.42 lm	Maximum value	340.05 cd/klm	Position	C=0.00 G=0.00	CG	Double Symmetrical

Diam=300mm

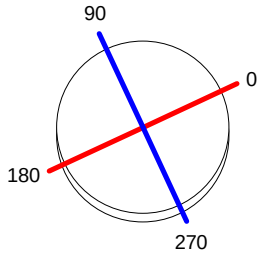

C Halfplanes

180.0 0.0
270.0 90.0

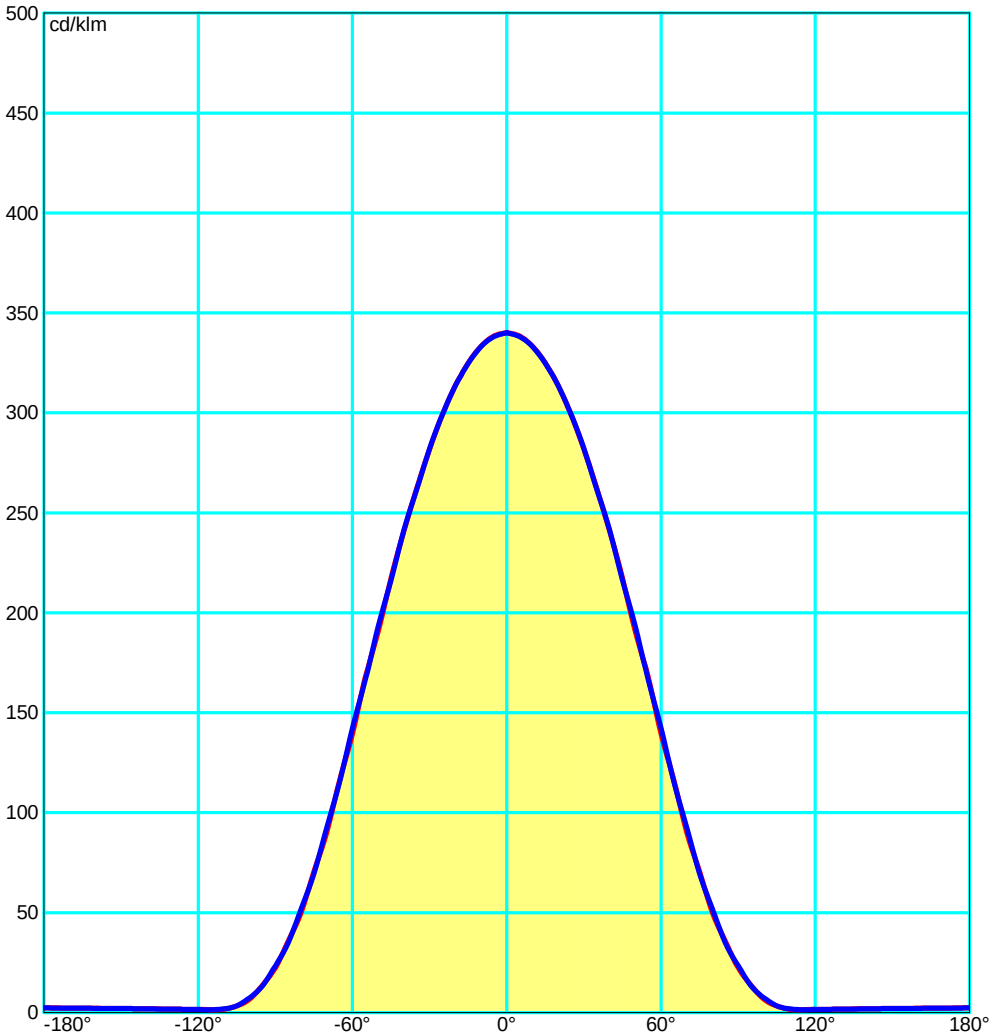

Luminaire
Code PX-0247-NEG
Name Plafon FORD leds 12W 3000K
Measurem.
Code CL116A17F033G
Name Plafon FORD leds 12W 3000K

Luminaire Flux	895.42 lm	Luminaire Power	12.28 W	Efficacy	72.92 lm/W	Efficiency	100.00%
Lamps Flux	895.42 lm	Maximum value	340.05 cd/klm	Position	C=0.00 G=0.00	CG	Double Symmetrical

Luminance

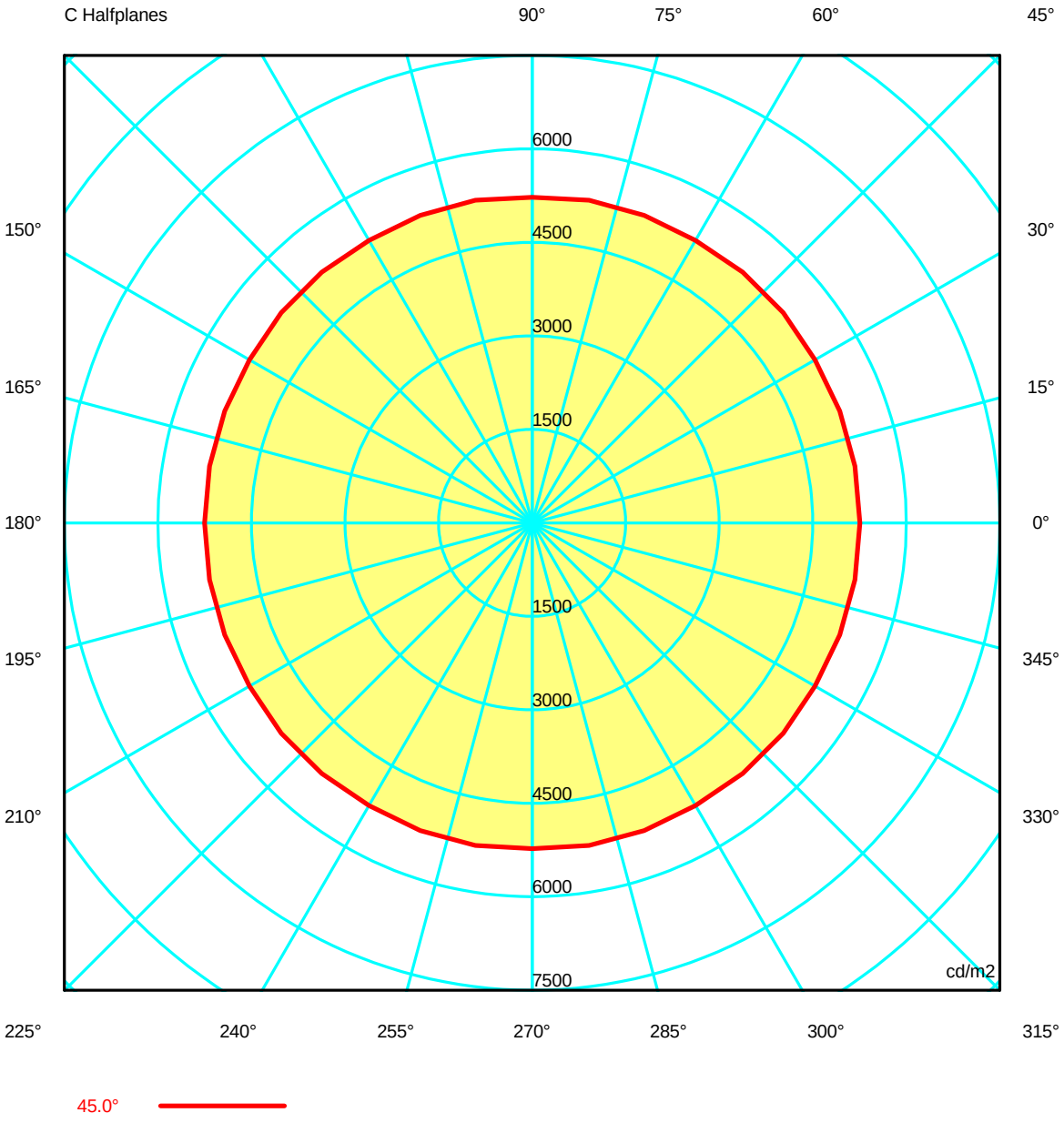

Luminaire
Code PX-0247-NEG
Name Plafon FORD leds 12W 3000K
Measurem.
Code CL116A17F033G
Name Plafon FORD leds 12W 3000K

Luminaire Flux	895.42 lm	Luminaire Power	12.28 W	Efficacy	72.92 lm/W	Efficiency	100.00%
Lamps Flux	895.42 lm	Maximum value	340.05 cd/klm	Position	C=0.00 G=0.00	CG	Double Symmetrical

Luminance cd/m2 **Table 1/3**

	C 0.00	C 10.00	C 20.00	C 30.00	C 40.00	C 50.00	C 60.00	C 70.00	C 80.00	C 90.00	C 100.00	C 110.00	C 120.00
G 0.0	6730.69	6730.69	6730.69	6730.69	6730.69	6730.69	6730.69	6730.69	6730.69	6730.69	6730.69	6730.69	6730.69
G 5.0	6632.08	6629.62	6628.59	6628.93	6629.38	6629.90	6629.94	6628.64	6627.20	6626.22	6627.20	6628.64	6629.94
G 10.0	6516.85	6514.88	6514.27	6514.93	6515.63	6516.26	6516.34	6515.22	6513.95	6513.08	6513.95	6515.22	6516.34
G 15.0	6387.85	6384.38	6380.84	6379.85	6384.07	6385.02	6383.53	6383.22	6384.04	6384.74	6384.04	6383.22	6383.53
G 20.0	6241.77	6238.29	6237.46	6239.51	6242.07	6242.38	6241.11	6241.26	6241.23	6240.14	6241.23	6241.26	6241.11
G 25.0	6080.37	6078.84	6071.96	6067.14	6075.89	6076.65	6069.05	6074.11	6079.25	6081.31	6079.25	6074.11	6069.05
G 30.0	5897.35	5899.59	5898.30	5896.85	5901.69	5903.81	5903.50	5904.71	5905.26	5903.59	5905.26	5904.71	5903.50
G 35.0	5701.82	5700.38	5693.82	5687.99	5703.85	5702.79	5688.72	5702.81	5708.59	5689.82	5708.59	5702.81	5688.72
G 40.0	5491.54	5488.18	5487.92	5491.70	5497.30	5498.84	5495.47	5492.31	5494.49	5501.93	5494.49	5492.31	5495.47
G 45.0	5252.29	5256.06	5247.84	5236.86	5252.14	5251.02	5237.35	5254.15	5256.79	5227.40	5256.79	5254.15	5237.35
G 50.0	4941.19	4980.19	4998.79	4995.07	4988.69	4989.96	5001.87	5000.38	5000.21	5005.91	5000.21	5000.38	5001.87
G 55.0	4713.59	4708.14	4688.12	4676.94	4707.53	4705.47	4678.79	4706.50	4716.45	4677.20	4716.45	4706.50	4678.79
G 60.0	4319.45	4374.37	4401.78	4397.11	4381.23	4384.50	4400.53	4397.62	4397.07	4409.85	4397.07	4397.62	4400.53
G 65.0	4054.71	4050.58	4036.83	4023.96	4051.68	4052.16	4029.86	4053.92	4060.51	4022.48	4060.51	4053.92	4029.86
G 70.0	3630.78	3695.67	3723.09	3710.36	3690.60	3700.27	3724.43	3716.77	3711.51	3726.28	3711.51	3716.77	3724.43
G 75.0	3385.38	3393.31	3373.66	3347.87	3385.05	3385.49	3353.60	3385.46	3391.39	3333.76	3391.39	3385.46	3353.60
G 80.0	2995.70	3071.91	3108.52	3102.85	3088.41	3095.80	3112.07	3099.96	3093.21	3107.49	3093.21	3099.96	3112.07
G 85.0	2889.15	2901.57	2878.28	2856.12	2895.17	2870.13	2812.24	2876.04	2902.14	2822.45	2902.14	2876.04	2812.24
G 90.0	2782.91	2883.69	2921.68	2895.85	2865.65	2884.08	2912.35	2869.12	2855.79	2912.18	2855.79	2869.12	2912.35

Luminaire
Code PX-0247-NEG
Name Plafon FORD leds 12W 3000K
Measurem.
Code CL116A17F033G
Name Plafon FORD leds 12W 3000K

Luminaire Flux	895.42 lm	Luminaire Power	12.28 W	Efficacy	72.92 lm/W	Efficiency	100.00%
Lamps Flux	895.42 lm	Maximum value	340.05 cd/klm	Position	C=0.00 G=0.00	CG	Double Symmetrical

Luminance cd/m2 **Table 2/3**

	C 130.00	C 140.00	C 150.00	C 160.00	C 170.00	C 180.00	C 190.00	C 200.00	C 210.00	C 220.00	C 230.00	C 240.00	C 250.00
G 0.0	6730.69	6730.69	6730.69	6730.69	6730.69	6730.69	6730.69	6730.69	6730.69	6730.69	6730.69	6730.69	6730.69
G 5.0	6629.90	6629.38	6628.93	6628.59	6629.62	6632.08	6629.62	6628.59	6628.93	6629.38	6629.90	6629.94	6628.64
G 10.0	6516.26	6515.63	6514.93	6514.27	6514.88	6516.85	6514.88	6514.27	6514.93	6515.63	6516.26	6516.34	6515.22
G 15.0	6385.02	6384.07	6379.85	6380.84	6384.38	6387.85	6384.38	6380.84	6379.85	6384.07	6385.02	6383.53	6383.22
G 20.0	6242.38	6242.07	6239.51	6237.46	6238.29	6241.77	6238.29	6237.46	6239.51	6242.07	6242.38	6241.11	6241.26
G 25.0	6076.65	6075.89	6067.14	6071.96	6078.84	6080.37	6078.84	6071.96	6067.14	6075.89	6076.65	6069.05	6074.11
G 30.0	5903.81	5901.69	5896.85	5898.30	5899.59	5897.35	5899.59	5898.30	5896.85	5901.69	5903.81	5903.50	5904.71
G 35.0	5702.79	5703.85	5687.99	5693.82	5700.38	5701.82	5700.38	5693.82	5687.99	5703.85	5702.79	5688.72	5702.81
G 40.0	5498.84	5497.30	5491.70	5487.92	5488.18	5491.54	5488.18	5487.92	5491.70	5497.30	5498.84	5495.47	5492.31
G 45.0	5251.02	5252.14	5236.86	5247.84	5256.06	5252.29	5256.06	5247.84	5236.86	5252.14	5251.02	5237.35	5254.15
G 50.0	4989.96	4988.69	4995.07	4998.79	4980.19	4941.19	4980.19	4998.79	4995.07	4988.69	4989.96	5001.87	5000.38
G 55.0	4705.47	4707.53	4676.94	4688.12	4708.14	4713.59	4708.14	4688.12	4676.94	4707.53	4705.47	4678.79	4706.50
G 60.0	4384.50	4381.23	4397.11	4401.78	4374.37	4319.45	4374.37	4401.78	4397.11	4381.23	4384.50	4400.53	4397.62
G 65.0	4052.16	4051.68	4023.96	4036.83	4050.58	4054.71	4050.58	4036.83	4023.96	4051.68	4052.16	4029.86	4053.92
G 70.0	3700.27	3690.60	3710.36	3723.09	3695.67	3630.78	3695.67	3723.09	3710.36	3690.60	3700.27	3724.43	3716.77
G 75.0	3385.49	3385.05	3347.87	3373.66	3393.31	3385.38	3393.31	3373.66	3347.87	3385.05	3385.49	3353.60	3385.46
G 80.0	3095.80	3088.41	3102.85	3108.52	3071.91	2995.70	3071.91	3108.52	3102.85	3088.41	3095.80	3112.07	3099.96
G 85.0	2870.13	2895.17	2856.12	2878.28	2901.57	2889.15	2901.57	2878.28	2856.12	2895.17	2870.13	2812.24	2876.04
G 90.0	2884.08	2865.65	2895.85	2921.68	2883.69	2782.91	2883.69	2921.68	2895.85	2865.65	2884.08	2912.35	2869.12

Luminaire
Code PX-0247-NEG
Name Plafon FORD leds 12W 3000K
Measurem.
Code CL116A17F033G
Name Plafon FORD leds 12W 3000K

Luminaire Flux	895.42 lm	Luminaire Power	12.28 W	Efficacy	72.92 lm/W	Efficiency 100.00%
Lamps Flux	895.42 lm	Maximum value	340.05 cd/klm	Position	C=0.00 G=0.00	CG Double Symmetrical

Luminance cd/m2 **Table 3/3**

	C 260.00	C 270.00	C 280.00	C 290.00	C 300.00	C 310.00	C 320.00	C 330.00	C 340.00	C 350.00
G 0.0	6730.69	6730.69	6730.69	6730.69	6730.69	6730.69	6730.69	6730.69	6730.69	6730.69
G 5.0	6627.20	6626.22	6627.20	6628.64	6629.94	6629.90	6629.38	6628.93	6628.59	6629.62
G 10.0	6513.95	6513.08	6513.95	6515.22	6516.34	6516.26	6515.63	6514.93	6514.27	6514.88
G 15.0	6384.04	6384.74	6384.04	6383.22	6383.53	6385.02	6384.07	6379.85	6380.84	6384.38
G 20.0	6241.23	6240.14	6241.23	6241.26	6241.11	6242.38	6242.07	6239.51	6237.46	6238.29
G 25.0	6079.25	6081.31	6079.25	6074.11	6069.05	6076.65	6075.89	6067.14	6071.96	6078.84
G 30.0	5905.26	5903.59	5905.26	5904.71	5903.50	5903.81	5901.69	5896.85	5898.30	5899.59
G 35.0	5708.59	5689.82	5708.59	5702.81	5688.72	5702.79	5703.85	5687.99	5693.82	5700.38
G 40.0	5494.49	5501.93	5494.49	5492.31	5495.47	5498.84	5497.30	5491.70	5487.92	5488.18
G 45.0	5256.79	5227.40	5256.79	5254.15	5237.35	5251.02	5252.14	5236.86	5247.84	5256.06
G 50.0	5000.21	5005.91	5000.21	5000.38	5001.87	4989.96	4988.69	4995.07	4998.79	4980.19
G 55.0	4716.45	4677.20	4716.45	4706.50	4678.79	4705.47	4707.53	4676.94	4688.12	4708.14
G 60.0	4397.07	4409.85	4397.07	4397.62	4400.53	4384.50	4381.23	4397.11	4401.78	4374.37
G 65.0	4060.51	4022.48	4060.51	4053.92	4029.86	4052.16	4051.68	4023.96	4036.83	4050.58
G 70.0	3711.51	3726.28	3711.51	3716.77	3724.43	3700.27	3690.60	3710.36	3723.09	3695.67
G 75.0	3391.39	3333.76	3391.39	3385.46	3353.60	3385.49	3385.05	3347.87	3373.66	3393.31
G 80.0	3093.21	3107.49	3093.21	3099.96	3112.07	3095.80	3088.41	3102.85	3108.52	3071.91
G 85.0	2902.14	2822.45	2902.14	2876.04	2812.24	2870.13	2895.17	2856.12	2878.28	2901.57
G 90.0	2855.79	2912.18	2855.79	2869.12	2912.35	2884.08	2865.65	2895.85	2921.68	2883.69

Luminaire
Code PX-0247-NEG
Name Plafon FORD leds 12W 3000K
Measurem.
Code CL116A17F033G
Name Plafon FORD leds 12W 3000K

Luminaire Flux	895.42 lm	Luminaire Power	12.28 W	Efficacy	72.92 lm/W	Efficiency	100.00%
Lamps Flux	895.42 lm	Maximum value	340.05 cd/klm	Position	C=0.00 G=0.00	CG	Double Symmetrical

PERCENTAGE ISOCANDLES

Projection: Equal Area SLI 6.8 Tight Tilting Angle:0°

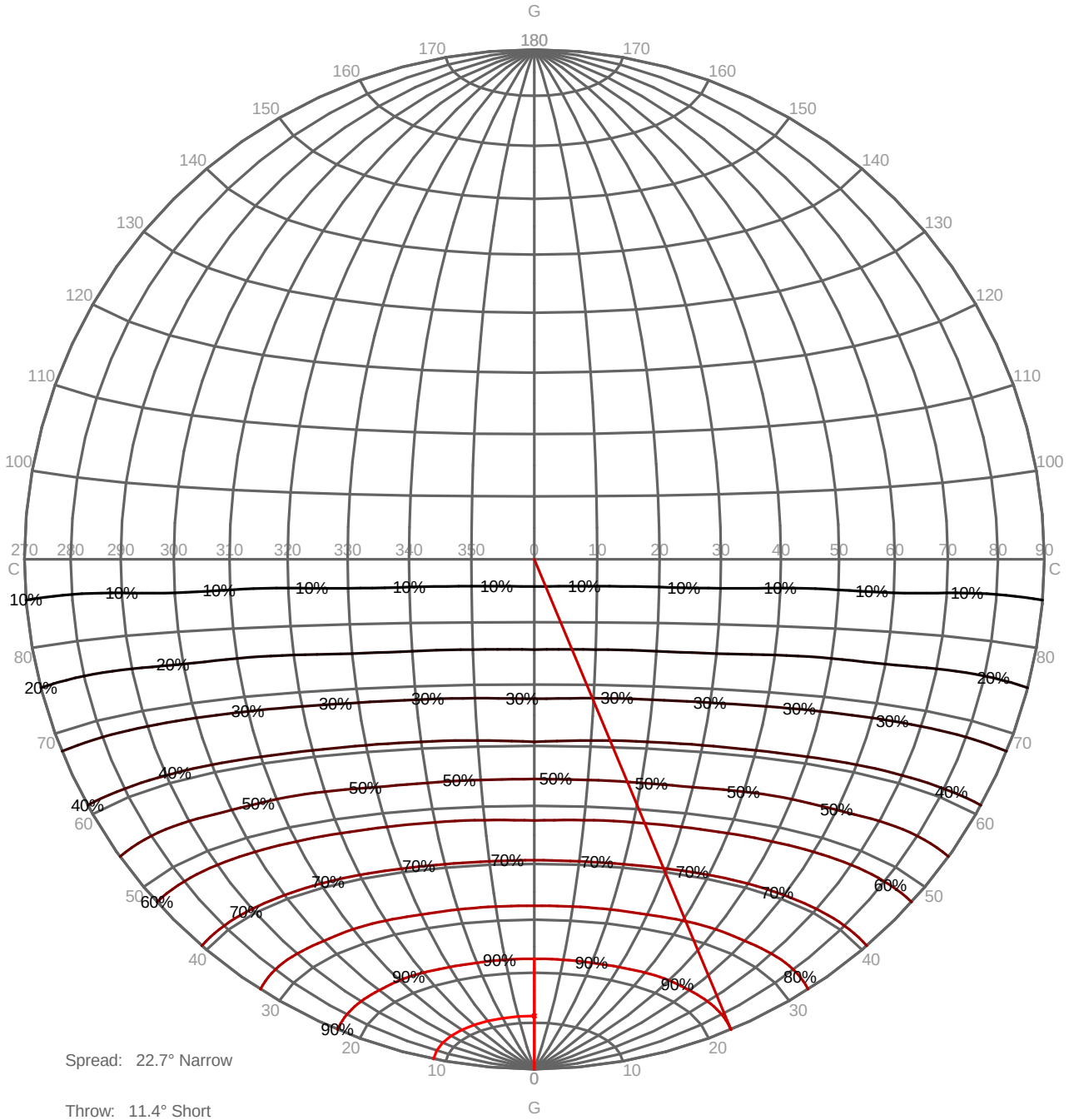

Spread: 22.7° Narrow

Throw: 11.4° Short

Luminaire
Code PX-0247-NEG
Name Plafon FORD leds 12W 3000K
Measurem.
Code CL116A17F033G
Name Plafon FORD leds 12W 3000K

Luminaire Flux	895.42 lm	Luminaire Power	12.28 W	Efficacy	72.92 lm/W	Efficiency	100.00%
Lamps Flux	895.42 lm	Maximum value	340.05 cd/klm	Position	C=0.00 G=0.00	CG	Double Symmetrical

Isolux (Floor)

Luminaire position X=0.00m Y=0.00m Z=2.50m

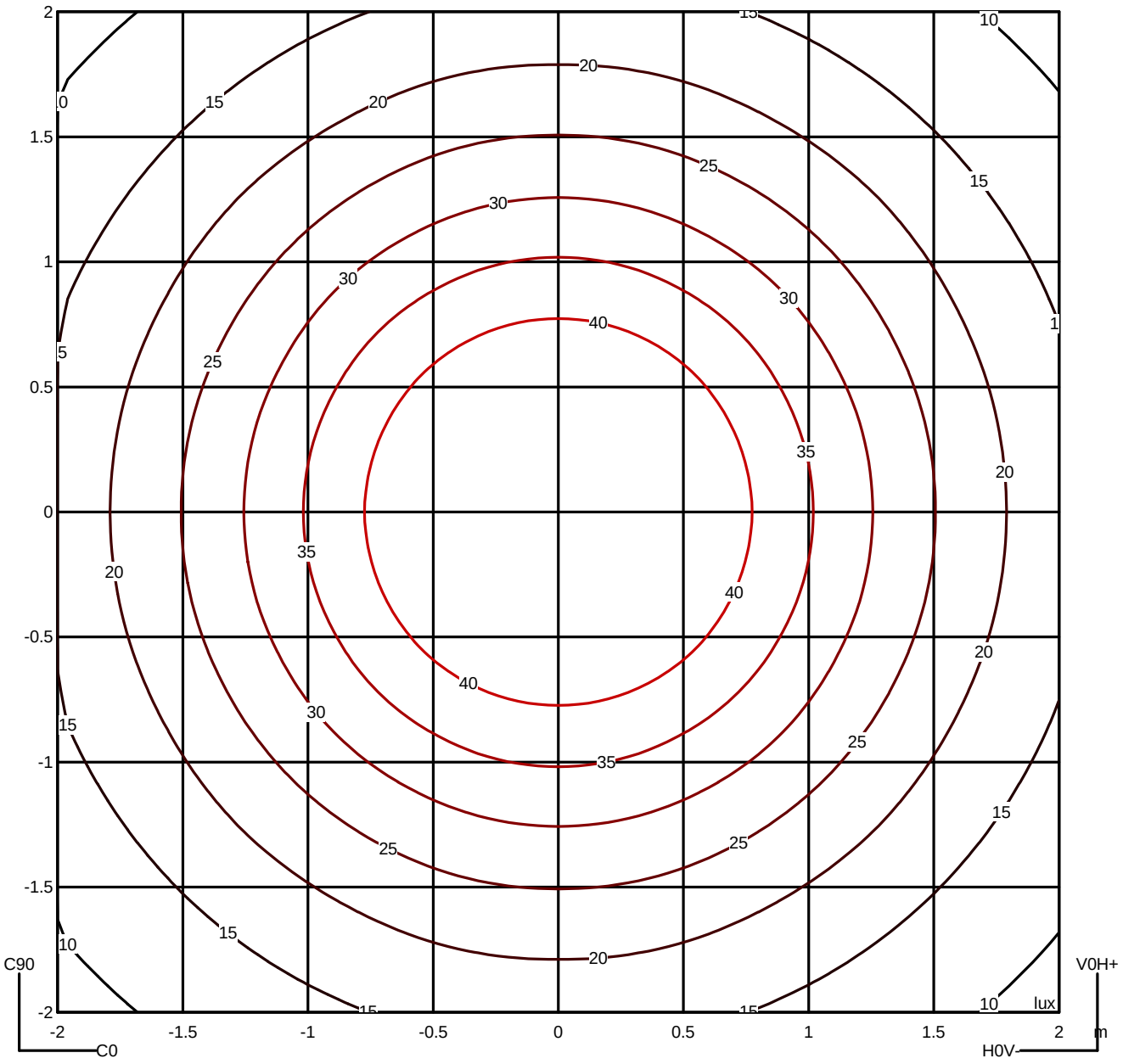

Luminaire
Code PX-0247-NEG
Name Plafon FORD leds 12W 3000K
Measurem.
Code CL116A17F033G
Name Plafon FORD leds 12W 3000K

Luminaire Flux	895.42 lm	Luminaire Power	12.28 W	Efficacy	72.92 lm/W	Efficiency	100.00%
Lamps Flux	895.42 lm	Maximum value	340.05 cd/klm	Position	C=0.00 G=0.00	CG	Double Symmetrical

Average Luminance [cd/m²]

	45°	50°	55°	60°	65°	70°	75°	80°	85°	
0.0°	5252	4941	4714	4319	4055	3631	3385	2996	2889	---
90.0°	5227	5006	4677	4410	4022	3726	3334	3107	2822	---

Flush mounted or longitudinal view

		Illumination(lx)										
A	A	2000	1000	750	500		<300					1.15
B	1		2000	1500	1000	750	500	<300				1.5
C					2000		1000	500	<300			1.85
D	2						2000	1000	500	<300		2.2
E	3							2000	1000	500	<300	2.55

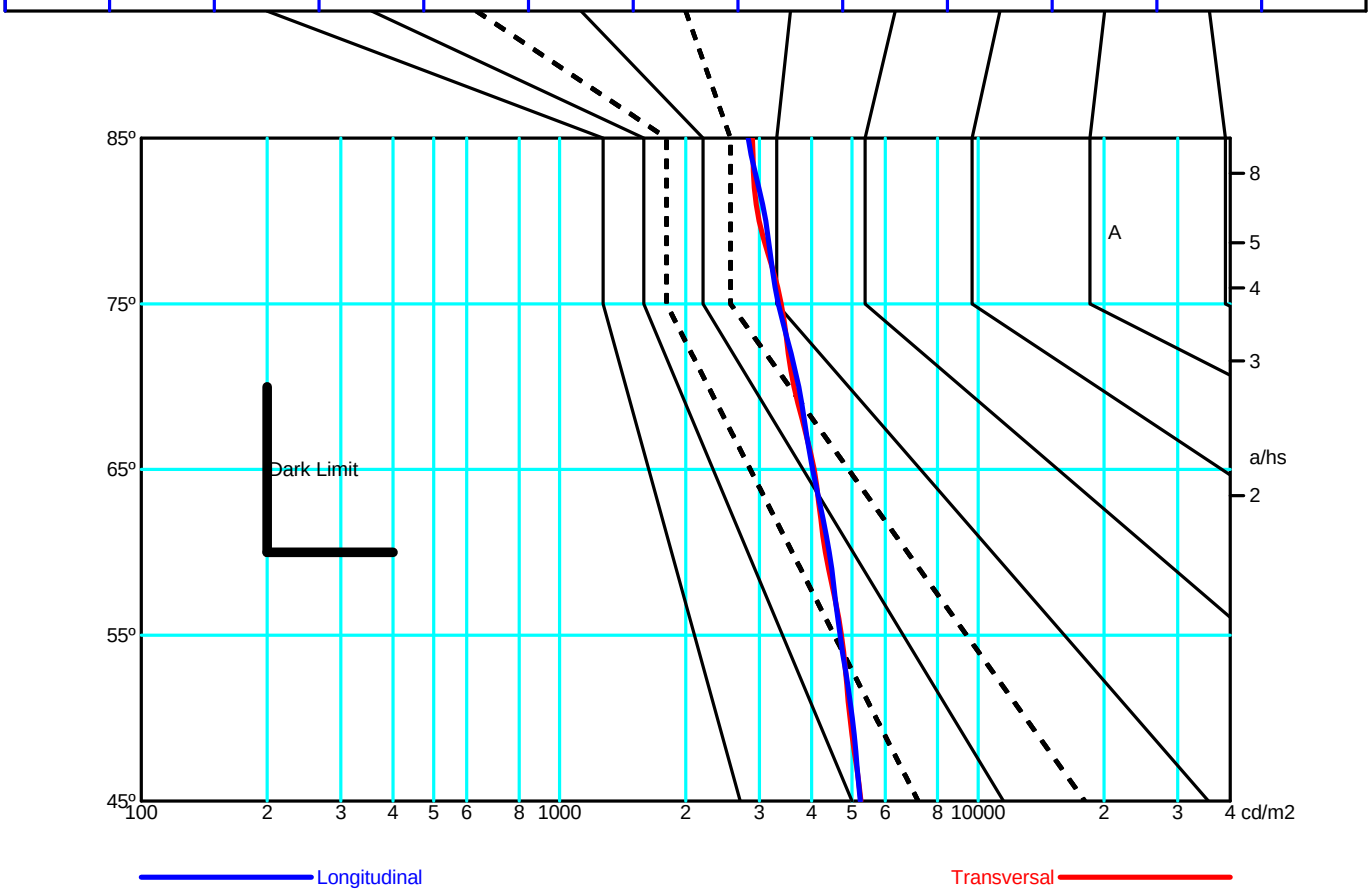

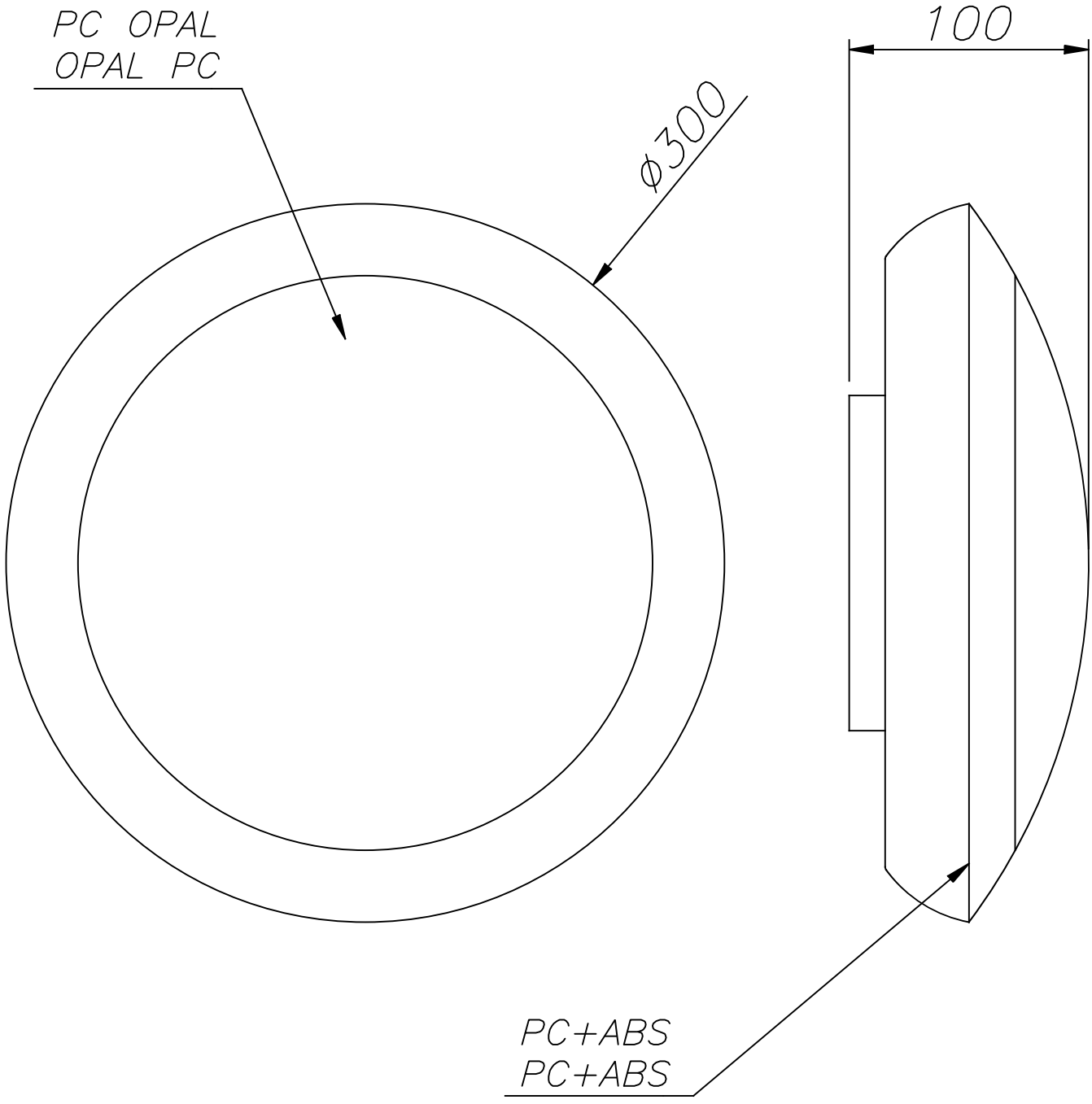
PC OPAL
OPAL PC
ø300
100
PC+ABS
PC+ABS

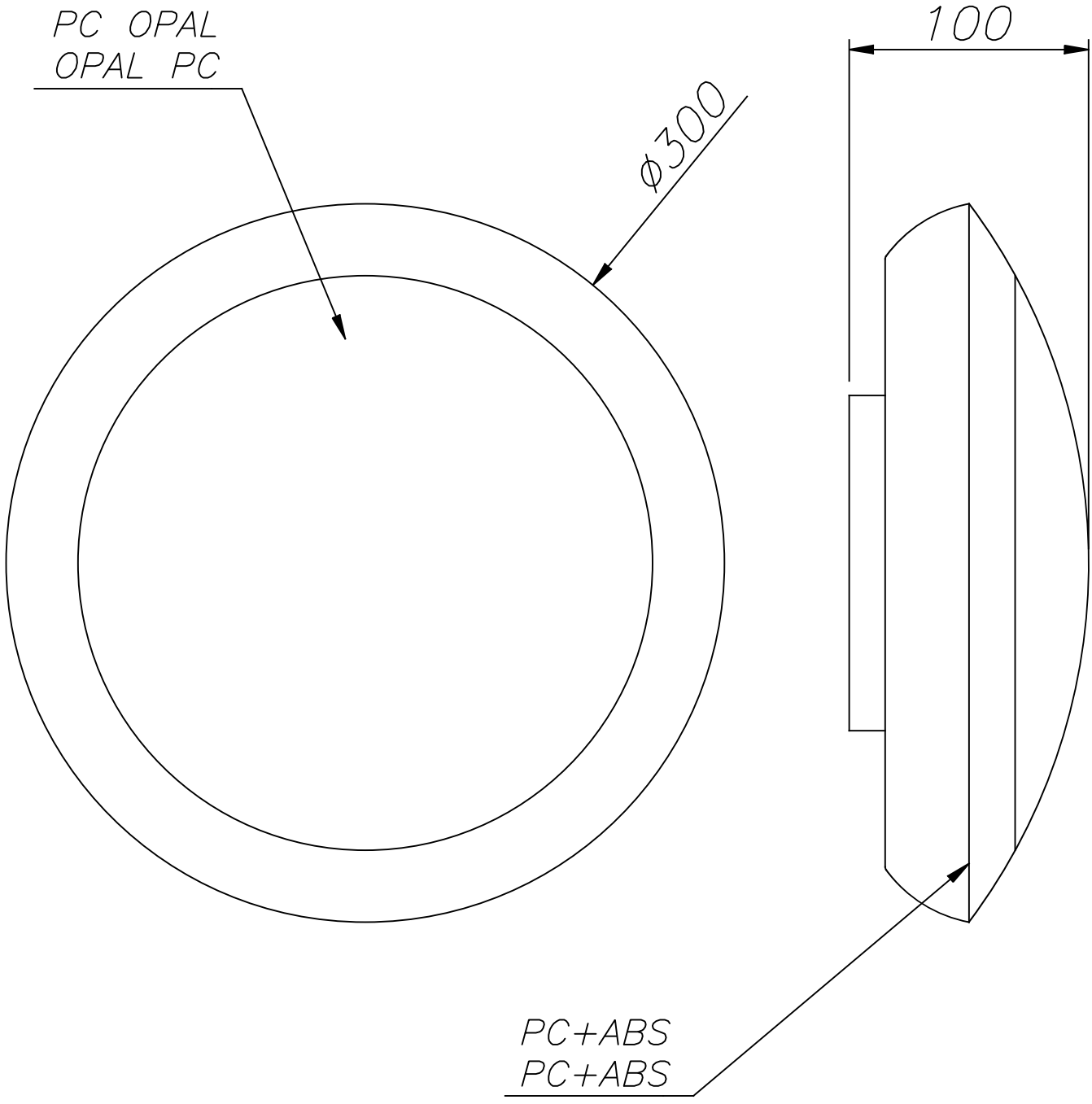
PC OPAL
OPAL PC
ø300
100
PC+ABS
PC+ABS